Leadshine

Reliable Motion Control

EtherCAT

Servo Products

CANopen

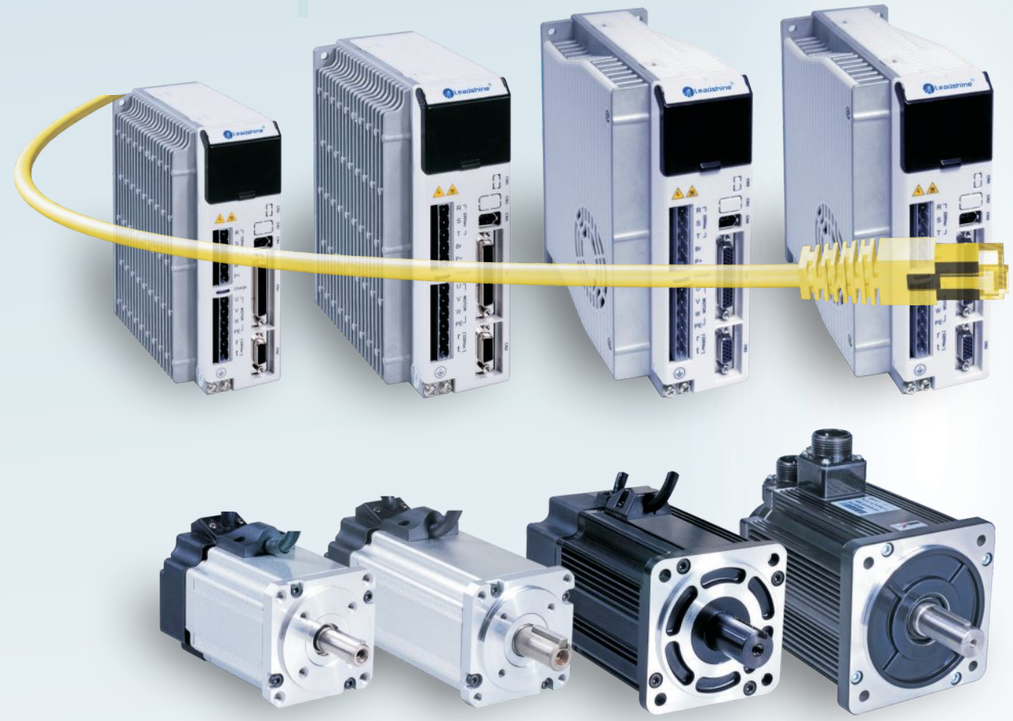

- **High Performance**
- **High Quality**
- **Highly Cost-effective**

(Power range from 25W to 3,000W)

Leading Technology *Shining Value*

Note: Product appearance and technical parameters are subject to change without notice.

© 2015 by Leadshine Technology.
All Rights Reserved



Headquarters

Company Overview

Founded in 1997 by Warren Li, a MIT PhD graduate and former USA professor, Leadshine Technology Co., Ltd. is a leading technology company dedicated to design, manufacture, market, and support reliable and affordable motion control products based on the latest control technologies. Leadshine offers a full complement of products including motion controllers, control systems, servo drives & motors, integrated servos, easy servo drives & motors (closed loop steppers), integrated easy servo motors, stepper drives & motors, and integrated steppers. Today, Leadshine is one of the largest motion control companies in the world to provide solutions and quality products to tens of industries, and thousands of OEM clients in Asia, Europe, North & South America, Australia, and Africa.

Leadshine is committed to providing its customers with world-class motion control products at highly competitive prices. "LEADING technology and SHINING value" is always what Leadshine dedicated to offer.

R&D

Led by Dr. Warren Li, a PhD majored in robotics & servo controls from MIT, Leadshine has one of the largest R&D teams in the motion control industry. The team consists of more than 100 R&D engineers. All of them are highly educated while most of them carry PhD & Master degrees in controls, electrical & electronics engineering, mechanical engineering, mechatronics, computer engineering, or computer science. Their strong background, experience & dedication make Leadshine capable of designing superior quality products of servos, steppers, controllers..., in the most efficient way based on the latest technologies. Many innovative designs and products from Leadshine have been awarded patents, and helped our customers to design & build high quality machines in cost effective ways.

Product Quality

All products offered by Leadshine are at industrial quality and have proven records of successfully implemented in tens of industries by thousands of OEM clients in the world.

Leadshine has been ISO9001 certified for quality management practices since 2004. Our products are made of high quality materials, and produced by following rigorus manufacturing and quality control procedures. From supplier selection to raw material inspection, to manufacturing, to in-producss quality control, and to final quality assurance, each process is strictly controlled to guarantee that every single Leadshine product will meet the pre-set tough quality standards. Most of our products are certified with CCC, CE, and UL/CUL.



Support and Service

Staffed with a highly professional and experienced application support team, Leadshine can help in the whole process of product development including initial application evaluation, product selection, design help & suggestion, and technical support. Our expertise and experience allow us to help OEM clients to produce competitive high quality machines in their industries. Leadshine can provide assistance and support services through email, telephone, and field support.

In addition, Leadshine also has a global distribution network consisting of local distributors that are highly experienced in the motion industry and understand their clients' application needs, to provide product selection support, system design assistance, sales & after-sales services, and technical support.

Servo Products

CONTENTS

High Voltage (220/230VAC input)

01 EL5 Series AC Servo Systems 01
1.1 Features 01
1.2 Typical Applications 02
02 EL5 Seris Servo Drives 03
2.1 Part Number 03
2.2 Specifications 04
2.3 System Tuning and Configuration 05
2.4 Typical System Configurations 06
2.5 Wiring Example in Position Mode 07
2.6 Wiring Example in Velocity / Torque Mode 08
2.7 Mechanical Specifications 09
03 EL5 Series Servo Motors 10
3.1 Part Number 10
3.2 Electrical Specifications 11
3.3 Mechanical Specifications 13
3.4 Speed-Torque Curves 16
04 Accessories for the EL5 Series 18
05 Order Information 20



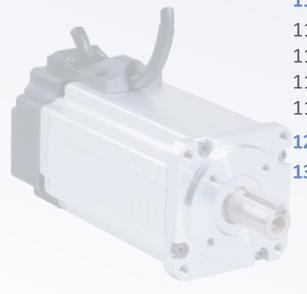

Low&Medium Voltage (18 - 80 VDC input)

06 ACS Series AC&BLDC Servo Drives 21
6.1 Features 21
6.2 Typical Applications 22
6.3 Part Number 22
6.4 Specifications 23
6.5 System Tuning and Configuration 24
6.6 Wiring Examples 25
6.7 Mechanical Specifications 26
07 ACM Series Servo Motors 27
7.1 Part Number 27
7.2 Electrical Specifications 28
7.3 Mechanical Specifications 29
7.4 Speed-Torque Curves 31
08 Order Information 32
09 Integrated Brushless Servos 33
9.1 Features 33
9.2 Typical Applications 34
9.3 Part Number 34
9.4 Specifications 35
9.5 Operation Modes 36
9.6 Mechanical Specifications 37
10 DCS Series DC Servo Drives 39
10.1 Features 39
10.2 Typical Applications 40
10.3 Part Number 40
10.4 Specifications 41
10.5 System Tuning and Configuration 42
10.6 Wiring Examples 43
10.7 Mechanical Specifications 45
11 DCM Series Servo Motors 46
11.1 Part Number 46
11.2 Electrical Specifications 47
11.3 Mechanical Specifications 48
11.4 Speed-Torque Curves 49
12 Order Information 50
13 Companion Products 51

01 EL5 Series AC Servo Systems

1.1 Features

High Precision

- **17-bit (131,072 ppr) high resolution encoder** optional .
- A standard EL5-M series motor comes with a 2500-line (10000 ppr) encoder. However, motors come with **17-bit (131,072 ppr) high resolution encoders** are also aviliable for applications require higher precision, smoother movement and lower torque ripple.

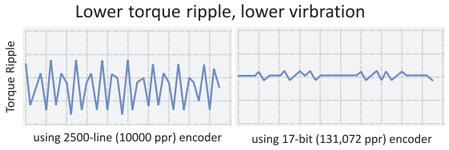

Excellent Position Following Capability

- By adopting load identification and torque feedforward advanced control algorithms, very small velocity ripple and position following error can be achieved. It is a great feature of the EL5 when multi-axis synchronization such as interpolations are required.

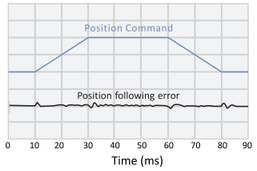

Quick Response

- Velocity response (bandwidth) up to 600 Hz.
- Takes only 10 ms from -3000 to 3000 rpm.

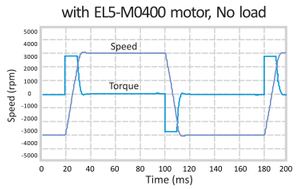

Vibration Suppression

- Adaptive filter makes the notch filter frequency automatically follow the machine resonance frequency.
- Can suppress vibration occurring at both starting and stopping in low stiffness machine.
- Suppress vibration frequency up to 2000 Hz

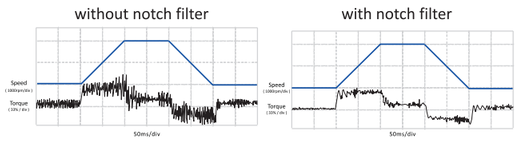

Manual/Auto Damping Filter

- There are two damping filters can be used to reduce natural vibration of the axis when stopping. The adaptive frequency covers a wide range from 1 Hz to 100 Hz. This feature makes the EL-5 series servos ideal for applications such as robots, bonding machines, etc.

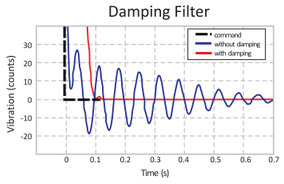

Support High Performance Fieldbuses

- The EL5 series servo drives support the most popular filedbuses available on the market today, including EtherCAT and CANopen. With Leadshine's high performance EtherCAT and CANopen motion controllers, the users can setup a high performance multi-axis system in a short time.

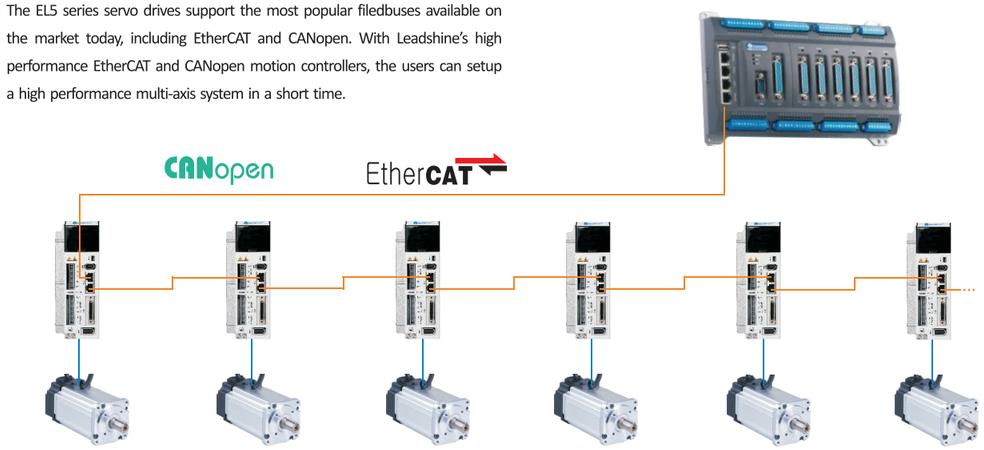

1.2 Typical Applications



02 EL5 Series Servo Drives



Rated Power

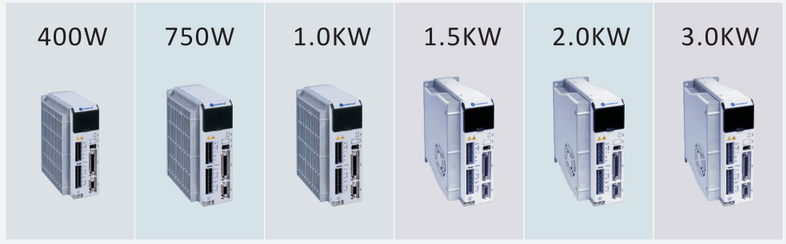

2.1 Part Number

EL5 — D 0750 — 1 — R
① ② ③ ④ ⑤

①	**Series**	EL5: EL5 Series
②	**Product**	D: Servo Drive M: Servo Motor
③	**Power**	0400: 400W 0750: 750W 1000: 1000W 1500: 1000W 2000: 1500W 3000: 3000W
④	**Encoder Type**	1: Incremental encoder (standard: 2500-line, 10,000 ppr) 2: Absolute encoder (standard: 17–bit, 131,072 ppr)
⑤	**Communication or Motor Size**	For servo drives, it is communication type. Blank: Step and direction only R: RS485 C: CANopen E: EtherCAT For servo motors, it is frame size. 16: NEMA16 (□40mm) 24: NEMA24 (□60mm) 32: NEMA32 (□80mm) 42: NEMA42 (□110mm) 51: NEMA51 (□130mm)

2.2 Specifications

Electrical Specifications

Parameters	EL5-D0400	EL5-D0750	EL5-D1000	EL5-D1500	EL5-D2000	EL5-D3000
Maximum Continuous Power	400 W	750 W	1000 W	1500 W	2000 W	3000 W
Maximum Continuous Current	2 A	3.7 A	5 A	7.5 A	10.5 A	16 A
Peak Current	8 A	16 A	22 A	25 A	30 A	50 A
Main Supply Voltage	1 / 3 phase 220/230 VAC					
Power Supply for Control Circuit	1 phase 220/230 VAC					
Logical Signal Input Current	7 - 20 mA					
Auxiliary Power for Encoder	5 V @ 100 mA					

Control Specifications

Parameters	EL5-D0400, EL5-D0750	EL5-D1000, EL5-D1500	EL5-D2000, EL5-D3000
Command Input	Step/Direction CW/CCW ± 10 V Analog	Step/Direction CW/CCW ± 10 V Analog	Step/Direction CW/CCW ± 10 V Analog
Pulse Input Frequency	0 - 500 kHz	0 - 500 kHz	0 - 500 kHz
Position Loop Bandwidth	200 Hz	200 Hz	200 Hz
Velocity Loop Bandwidth	600 Hz	600 Hz	600 Hz
Speed Control Range	1:5000	1:5000	1:5000
Electronic Gear Ratio	1/32767 - 32767	1/32767 - 32767	1/32767 - 32767
Enable/Disable Input	Differential	Differential	Differential
Alarm Signal Output	Isolated OC output	Isolated OC Output	Isolated OC Output
End Limit Input	Positive & Negative	Positive & Negative	Positive & Negative
In Position Signal Output	Isolated OC output	Isolated OC Output	Isolated OC Output
Encoder Feedback	2500-line or 17-bit	2500-line or 17-bit	2500-line or 17-bit
Hall Effect Sensor Feedback	U, V, W (differential)	U, V, W (Differential)	U, V, W (Differential)
Encoder Output	A, B, Z (differential)	A, B, Z (Differential)	A, B, Z (Differential)
Communication Interface	RS485/CANopen/EtherCAT	RS485/CANopen/EtherCAT	RS485/CANopen/EtherCAT
Regeneration Resistor	Built-in (50 ohm, 50W) Supports external (>200 ohm)	Built-in (50 ohm, 100W) Supports External (>75 ohm)	Built-in (60 ohm, 200W) Supports External (>60 ohm)

Mechanical Specifications

Parameters	EL5-D0400	EL5-D0750	EL5-D1000/EL5-D1500	EL5-D2000, EL5-D3000
Size (mm)	157.5×130×54	180×140×70	180×165×75	218×210×114
Weight (g)	1200	1500	1600	2900

Operating Environment

Cooling		Natural cooling or Forced cooling
Operating Environment	Environment	Avoid dust, oil fog and corrosive gases
	Ambient Temperature	0 to +40 °C.
	Humidity	40% RH to 90%RH, no condensation
	Vibration	5.9 m/s^2 MAX
Storage Temperature		-20 °C to 80 °C

2.3 System Tuning and Configuration

On-board HMI

7-segment highlight LED display, and functions the same as those of ProTuner.

"**M**" Button: Switch modes/menus.
"**Ent**" Button: Enter the parameter settings or set the values to the selected parameter and exit.

- ▲ UP Button: Increase the selected value by 1.
- ▼ DOWN Button: Decrease the selected value by 1.
- ◀ SHIFT Button: Press this to shift the digit for data change.



HMI

Tuning Via On-board HMI in JOG Mode

When the drive configured in JOG mode, the user can tune the servo system for the application without other controllers or command sources, such as external motion controllers or PC with ProTuner. For most of applications, configuration & tuning via on-board HMI should be enough to meet the application requirements. However, the user can also configure the advanced features or fine tune the system via ProTuner below.

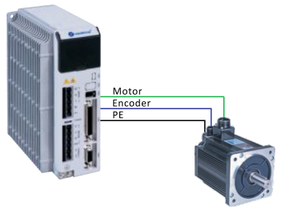

ProTuner (Windows Based Setup Software)

- Upload & Download parameter settings
- Digital oscilloscope for real-time current, velocity, position following error display.
- PID parameter settings for position loop
- PI parameter settings for velocity loop
- PI parameter settings for current loop
- Acceleration feed-forward, velocity feed-forward
- Motor parameter configuration
- Electronic gear rate
- Position following error range setting
- Encoder resolution setting
- Digital input and output settings
- Set parameters for simple motion testing
- Read the latest 10 failure events and clear the events

Notes:

1. One PC RS232 interface or one USB port for USB-to-RS232 converter is necessary.
2. Leadshine offers special cable for communication between ProTuner and the drive. See the accessories section for more information.

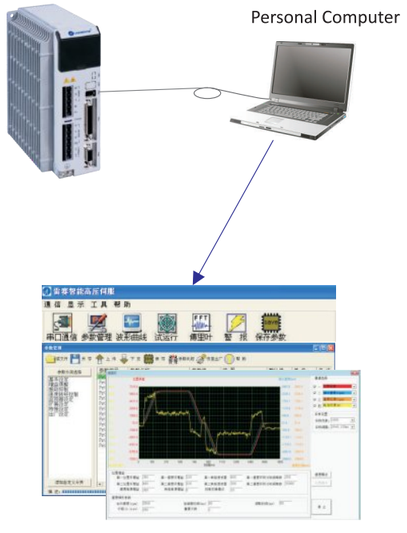

ProTuner

2.4 Typical System Configurations

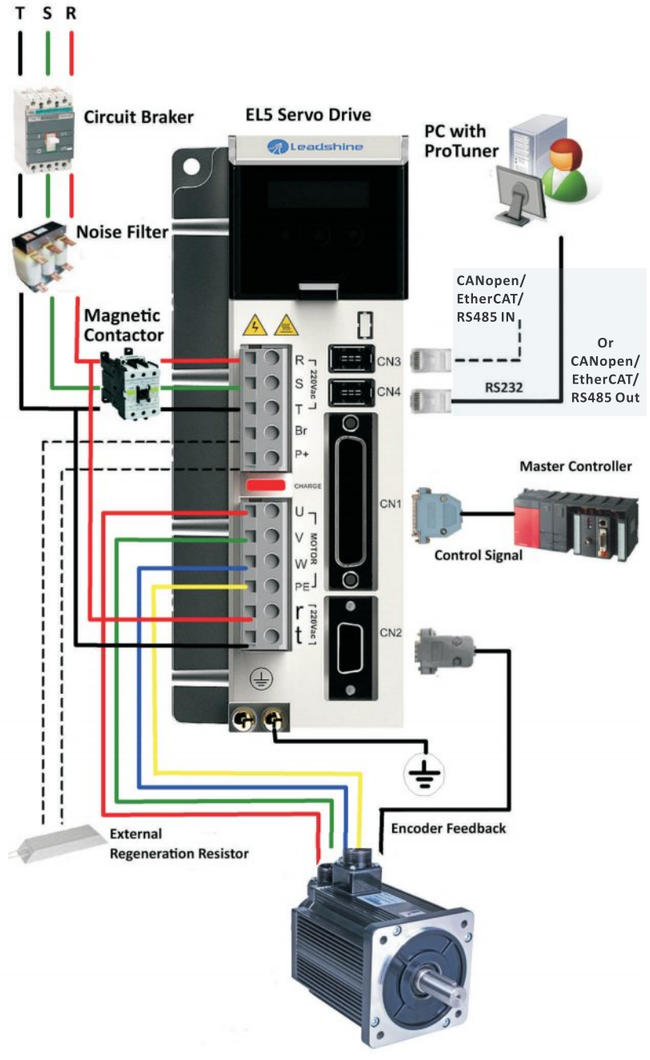

Notes:

1. DO NOT wiring the S phase if using a single-phase power supply.
2. DO NOT turn on power without first positively tightening all terminal block screws. Otherwise, loose contacts may generate heat (smoking, firing).
3. On some special occasions, the user can use the ALARM signal to switch servo drive off. Remember installation of a surge protector is required, and creat the protective circuit.
4. DO remember to read **User's Manuals** for a dedicated servo drive for more information about the system configurations.

2.5 Wiring Example in Position Mode

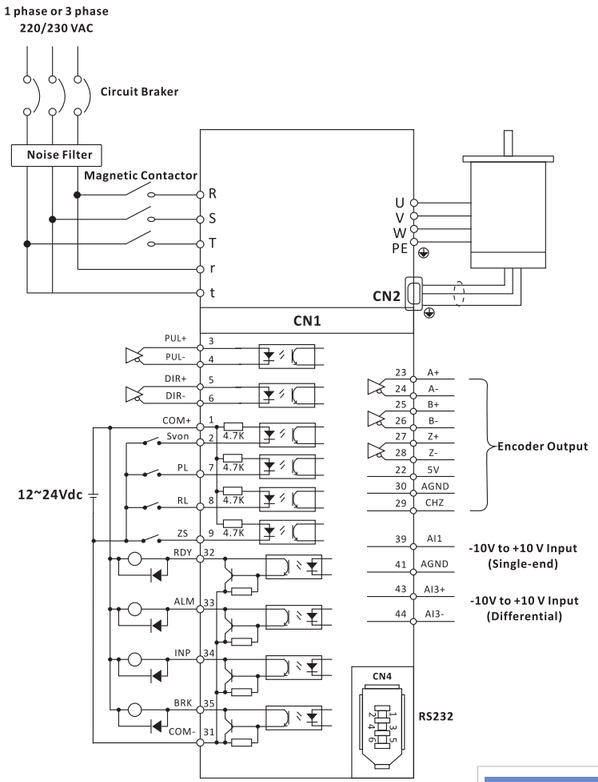

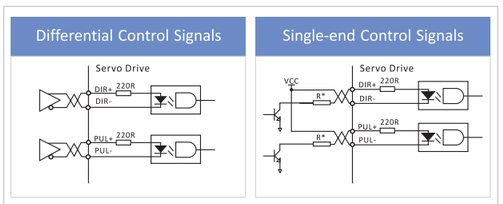

Notes:

1. Rated current of the external power supply (12 to 24 VDC) for digital inputs and outputs should more than 100mA.
2. Recommend use AWG24-26 shielded cables for control and feedback signals, and correctly ground the shielded cable.
3. Cable for control signals (CN1) should less than 3 meters, and cable for feedback signals (CN2) should less than 10 meters.
4. Recommend use an isolation transformer to supply the drive, and use a noise filter to protect the power line from external noise, and use a circuit breaker (NFB) to cut off power in the case of an overload, and use an electromagnetic contactor to switch servo power on and off.
5. Remember creat the protective circuit (a free wheeling diode control circuit) for digital outputs if they are used to control an inductive load.
6. The drive can accept differential and single-ended inputs, including open-collector and PNP output. Recommend use differential (line driver) control signals to increase noise immunity of the system.
7. *Series connect resistors for current-limiting when +12V or +24V single-ended control signals are used. R=1K (Power>0.25W), if Vcc=12 V, and R=2K (Power>0.25W), if Vcc=24 V.

2.6 Wiring Example in Velocity / Torque Mode

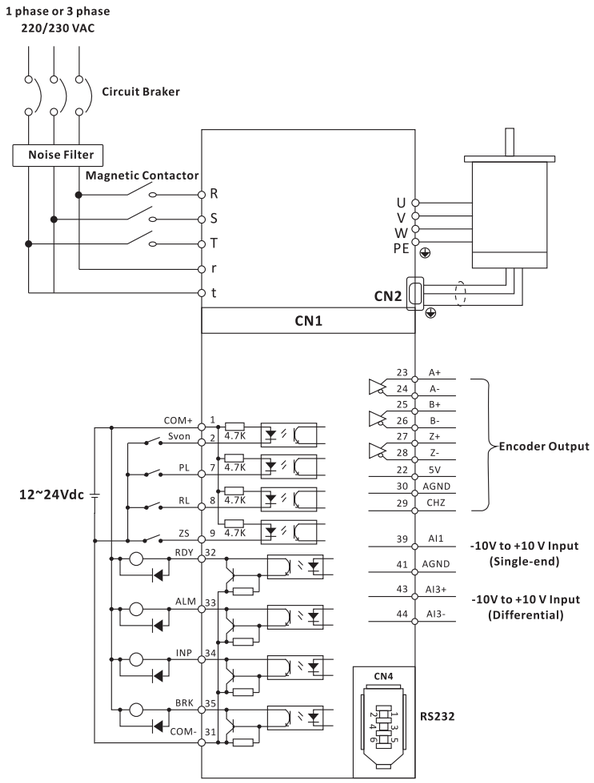

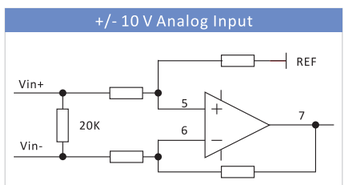

Notes:

1. Rated current of the external power supply (12 to 24 VDC) for digital inputs and outputs should more than 100mA.
2. Recommend use AWG24-26 shielded cables for control and feedback signals, and correctly ground the shielded cable.
3. Cable for control signals (CN1) should less than 3 m, and cable for feedback signals (CN2) should less than 20 m.
4. Recommend use an isolation transformer to supply the drive, and use a noise filter to protect the power line from external noise, and use a circuit breaker (NFB) to cut off power in the case of an overload, and use an electromagnetic contactor to switch servo power on and off.
5. Remember creat the protective circuit (a free wheeling diode control circuit) for digital outputs if they are used to control an inductive load.
6. Analog command should be between -10V and +10V. Its input impendance is 20 KΩ.

2.7 Mechanical Specifications

Units: mm 1 inch = 25.4 mm

100W/200W/400W

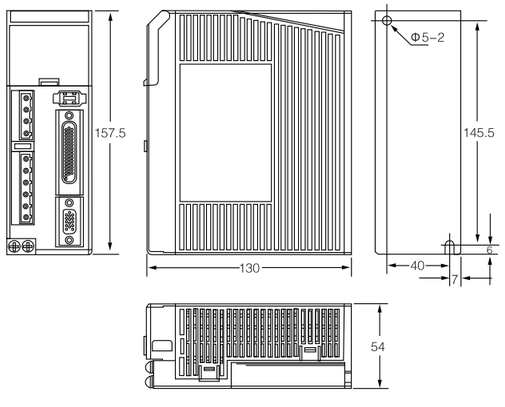

750W

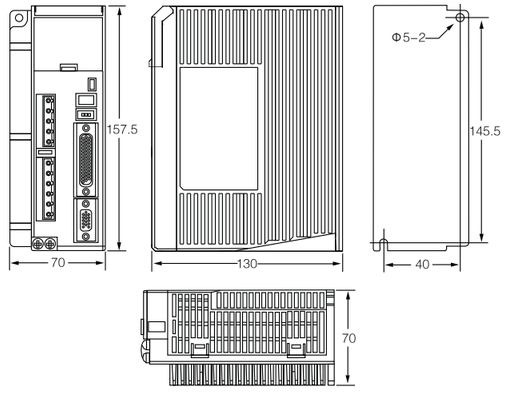

1KW/1.5KW

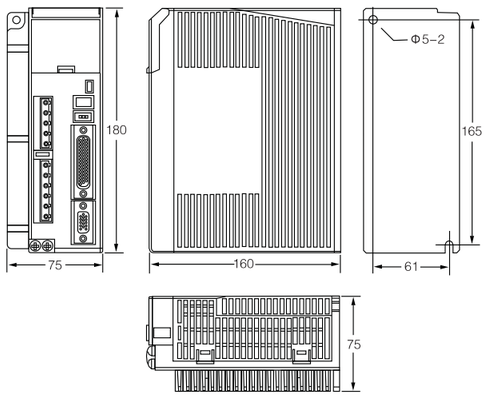

2KW/3KW

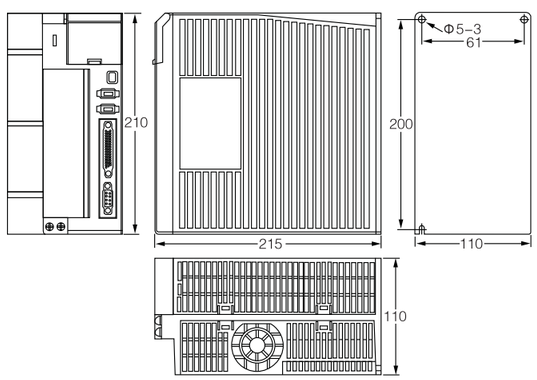

Installation Notes:

(1) Install the drives indoors, where the drives are not subjected to rain or direct sun beams. The drives are not water proof.

(2) Install the drives where the products are not subjected to corrosive atmospheres, and are free from splash of inflammable gas, grinding oil, oil mist, iron powder or chips and etc.

(3) Install the drives in a well-ventilated and low humidity and dust-free place.

(4) Do not give strong impact shock to the drive nor place the heavy object on them.

(5) Install in vertical position, and reserve enough space around the servo drive for ventilation or effective cooling.

(6) Keep the ambient temperature within the permissible temperature range (0 to 50 °C) for the product. Use force cooling methord if necessary.

03 EL5 Series Servo Motors

	40mm (NEMA16)	60mm (NEMA24)	80mm (NEMA32)	110mm (NEMA42)	130mm (NEMA51)
Frame Size					
Rated Power	50W 100W	200W 400W 600W	750W 1.0KW	1.2KW 1.8KW	1.0KW 1.5KW 2.0KW 2.5KW 3.0KW

3.1 Part Number

EL5 — M 0750 — 1 — 32 — B

① ② ③ ④ ⑤ ⑥

①	**Series**	EL5: EL5 Series
②	**Product**	D: Servo Drive M: Servo Motor
③	**Power**	0050: 50W 0100: 100W 0200: 200W 0400: 400W 0600: 600W 0750: 750W 1000: 1000W 1200: 1200W 1500: 1500W 1800: 1800W 2000: 2000W 2500: 2500W 3000: 3000W
④	**Encoder Type**	1: Incremental encoder (standard: 2500-line, 10,000 ppr) 2: Absolute encoder (standard: 17–bit, 131,072 ppr)
⑤	**Communication or Motor Size**	For servo drives, it is communication type. Blank: Step and direction only R: RS485 C: CANopen E: EtherCAT For servo motors, it is frame size. 16: NEMA16 (□40mm) 24: NEMA24 (□60mm) 32: NEMA32 (□80mm) 42: NEMA42 (□110mm) 51: NEMA51 (□130mm)
⑥	**Brake**	Blank: no brake B: with brake

3.2 Electrical Specifications

NEMA16 (☐ 40 mm)
Power: 50W, 100W



Specifications

Parameters	Units	EL5-M0050-x-16	EL5-M0100-x-16(-B)
Rated Power	W	50	100
Rated Torque	Nm	0.159	0.32
Rated Current	A	0.69	1.27
Rated Speed	RPM	3000	3000
Peak Torque	Nm	0.477	0.95
Peak Current	A	2.07	3.81
Torque Constant	Nm/A	0.23	0.32
Back EMF Constant	V/krpm	14.3	18.3
Inertia	$Kg*m^2\times10^{-5}$	0.25	0.48(0.65)
Poles	-	8	8

NEMA24 (☐ 60 mm)
Power: 200W, 400W, 600W



Specifications

Parameters	Units	EL5-M0200-x-24(-B)	EL5-M0400-x-24(-B)	EL5-M0600-x-24(-B)
Rated Power	W	200	400	600
Rated Torque	Nm	0.64	1.27	1.9
Rated Current	A	1.5	3.0	4.1
Rated Speed	RPM	3000	3000	3000
Peak Torque	Nm	1.91	3.82	5.73
Peak Current	A	5.6	10.8	11.1
Torque Constant	Nm/A	0.42	0.524	0.524
Back EMF Constant	V/krpm	28.1	31.7	31.7
Inertia	$Kg*m^2\times10^{-5}$	2.1(2.8)	4.2(5.4)	6(7.8)
Poles	-	10	10	10

NEMA32 (☐ 80 mm)
Power: 750W, 1000W



Specifications

Parameters	Units	EL5-M0750-x-32(-B)	EL5-M1000-x-32(-B)
Rated Power	W	750	1000
Rated Torque	Nm	2.4	3.2
Rated Current	A	4.5	5.9
Rated Speed	RPM	3000	3000
Peak Torque	Nm	7.2	9.6
Peak Current	A	13.5	17.7
Torque Constant	Nm/A	0.564	0.78
Back EMF Constant	V/krpm	35.7	46
Inertia	$Kg*m^2\times10^{-5}$	15.3(19.5)	26.5(30)
Poles	-	8	8

NEMA42 (☐ 110 mm)
Power: 1200W, 1800W



Specifications

Parameters	Units	EL5-M1200-x-42(-B)	EL5-M1800-x-42(-B)
Rated Power	W	1200	1800
Rated Torque	Nm	4	6
Rated Current	A	5	6
Rated Speed	RPM	3000	3000
Peak Torque	Nm	12	18
Peak Current	A	15	18
Torque Constant	Nm/A	0.8	1
Back EMF Constant	V/krpm	54	60
Inertia	$Kg*m^2\times10^{-5}$	54(70)	76(95)
Poles	-	8	8

NEMA51 (☐ 130 mm)
Power: 1000W, 1500W, 2000W, 2500W, 3000W



Specifications

Parameters	Units	EL5-M1000-x-51	EL5-M1500-x-51	EL5-M2000-x-51	EL5-M2500-x-51	EL5-M3000-x-51
Rated Power	W	1000	1500	2000	2500	3000
Rated Torque	Nm	4	6	7.7	10	15
Rated Current	A	4	6	7.5	10	13.5
Rated Speed	RPM	2500	2500	2500	2500	2500
Peak Torque	Nm	12	18	22	25	30
Peak Current	A	12	18	22	25	27
Torque Constant	Nm/A	1	1	1.03	1	1.11
Back EMF Constant	V/krpm	72	65	68	70	67
Inertia	$Kg*m^2\times10^{-5}$	85	126	153	194	277
Poles	-	8	8	8	8	8

Operating Environment

Parameters	Descriptions	Parameters	Descriptions
Insulation Level	B	Insulation Voltage	AC1500V, 50Hz, 60seconds
Insulation Resistence	DC500V, above 10MΩ	Vibration	<2.5 G
Ambient Temperature	0 to 40℃	Humidity	20%RH to 90%RH
Storage Temperature	-20 to 70℃	Mounting Method	Flange Mounted

3.3 Mechanical Specifications

Units: mm 1 inch = 25.4 mm

EL5-M0050-x-16 and EL5-M0100-x-16

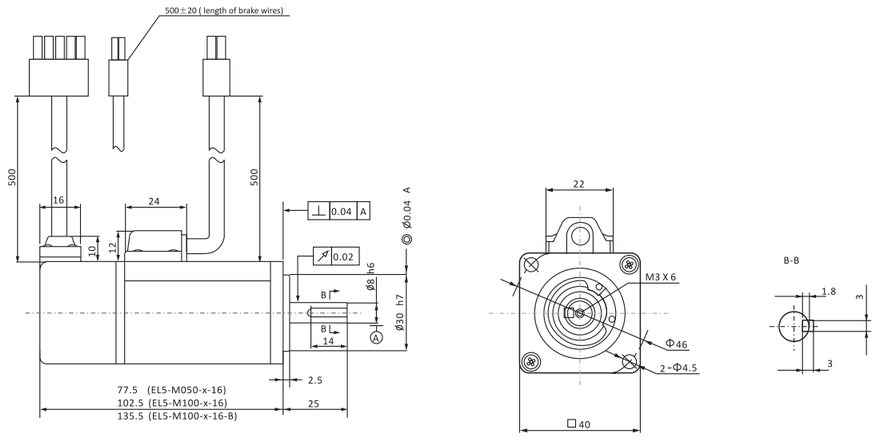

EL5-M0200-x-24, EL5-M0400-x-24 and EL5-M0600-x-24

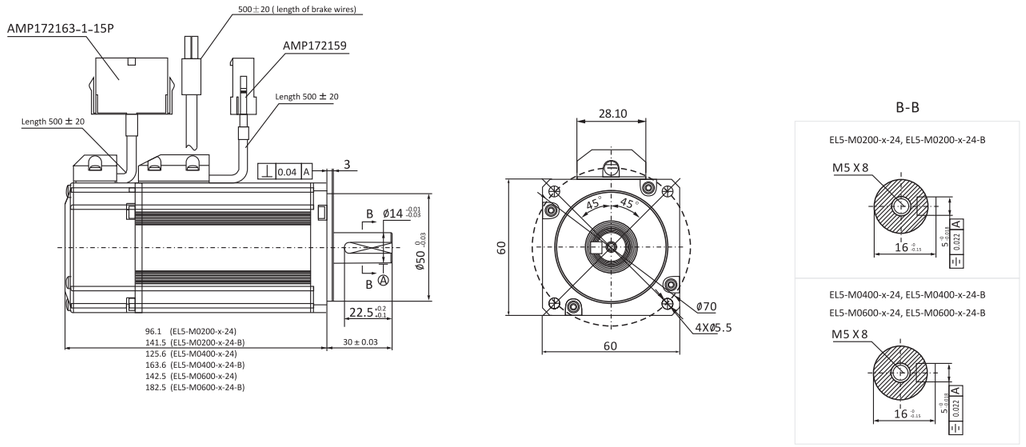

Installation Notes:

(1) Do not give strong impact shock to the motor shaft.

(2) Make sure the hall sensor signals U/V/W are connected to the drive correctly..

(3) The motors are not water proof. Please contact Leadshine if you need a water proof product.

(4) Keep the ambient temperature within the permissible temperature range (0 to 40℃) for the product. Use force cooling methord if necessary.

(5) Motors with brakes and oil seal are available. Please contact Leadshine if you need.

EL5-M0750-x-32, EL5-M1000-x-32

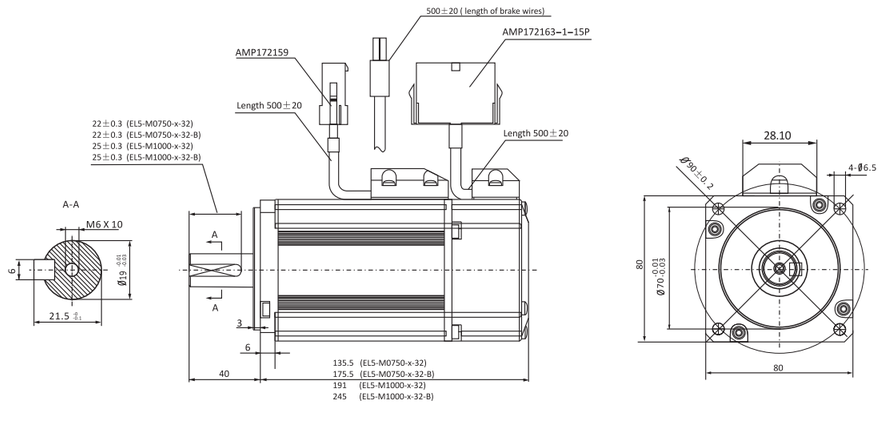

Installation Notes:

(1) Do not give strong impact shock to the motor shaft.

(2) Make sure the hall sensor signals U/V/W are connected to the drive correctly..

(3) The motors are not water proof. Please contact Leadshine if you need a water proof product.

(4) Keep the ambient temperature within the permissible temperature range (0 to 40℃) for the product. Use force cooling methord if necessary.

(5) Motors with brakes and oil seal are available. Please contact Leadshine if you need.

3.3 Mechanical Specifications (Con't)

Units: mm 1 inch = 25.4 mm

● EL5-M1200-x-42 and EL5-M1800-x-42

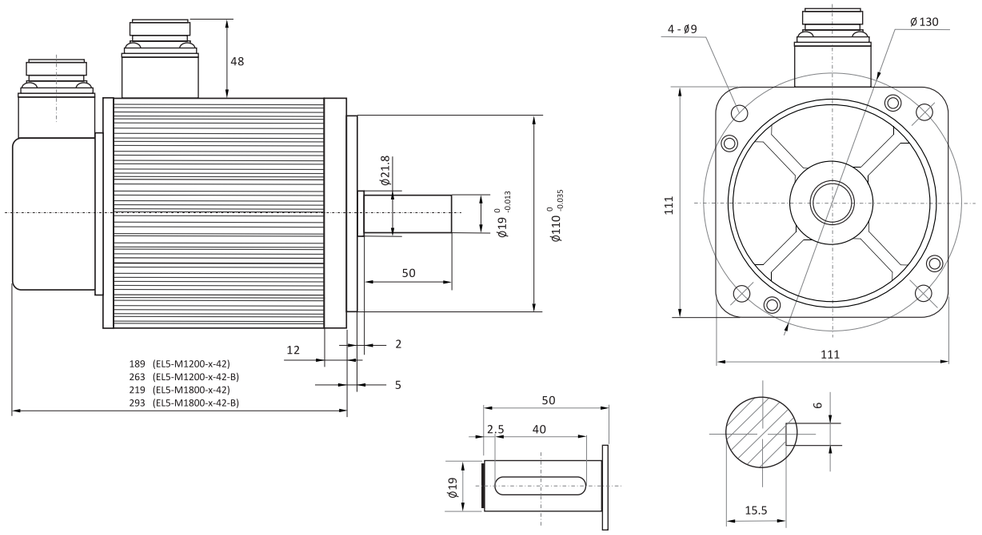

● EL5-M1000-x-51, EL5-M1500-x-51, EL5-M2000-x-51, EL5-M2500-x-51, EL5-M3000-x-51

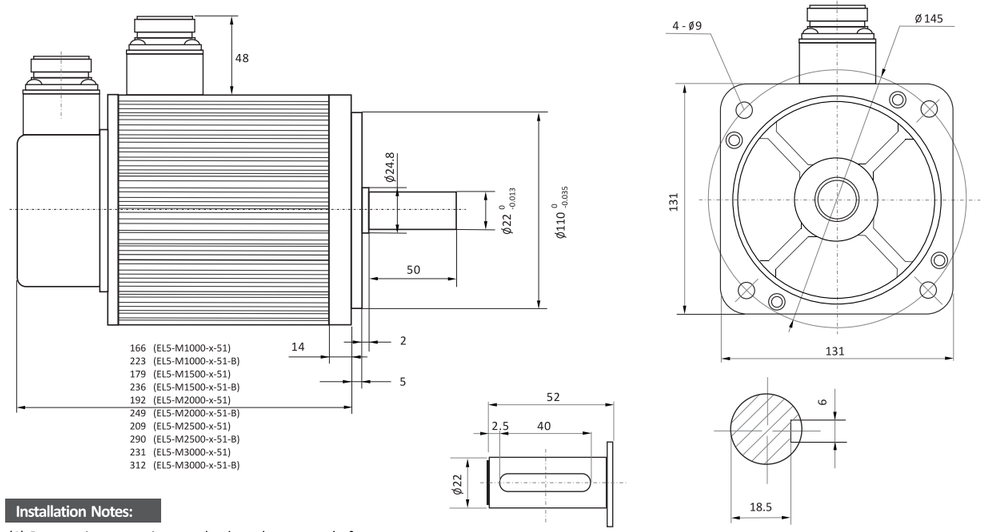

Installation Notes:

(1) Do not give strong impact shock to the motor shaft.

(2) Make sure the hall sensor signals U/V/W are connected to the drive correctly..

(3) The motors are not water proof. Please contact Leadshine if you need a water proof product.

(4) Keep the ambient temperature within the permissible temperature range (0 to 40℃) for the product. Use force cooling methord if necessary.

(5) Motors with brakes and oil seal are available. Please contact Leadshine if you need.

3.4 Speed-Torque Curves

EL5-D0400-x-x	EL5-D0750-x-x	EL5-D1000-x-x	EL5-D1500-x-x
0.4 KW	0.75 KW	1.0 KW	1.5 KW

EL5-M0050-x-16

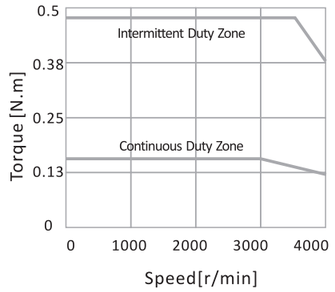

EL5-M0100-x-16

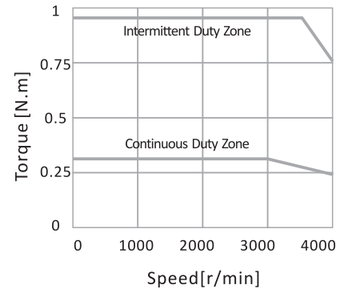

EL5-M0200-x-24

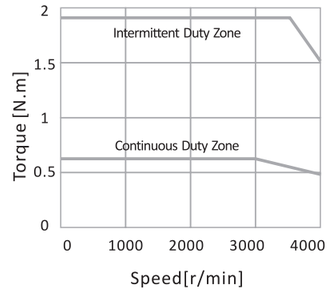

EL5-M0400-x-24

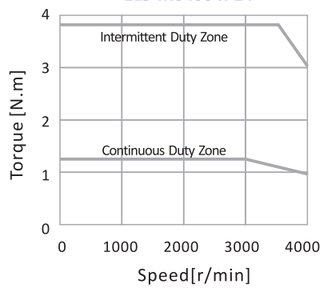

EL5-M0600-x-24

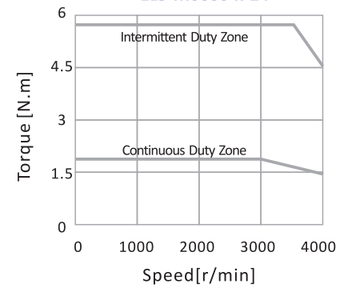

EL5-M0750-x-32

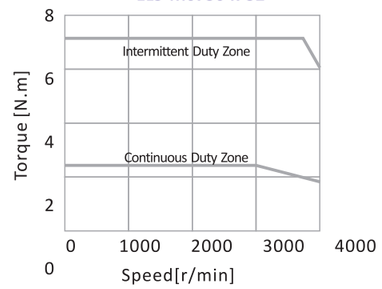

EL5-M1000-x-32

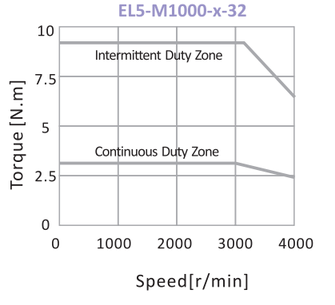

EL5-M1000-x-51

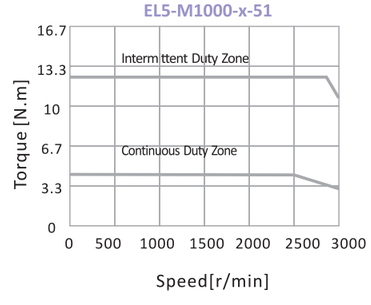

EL5-M1200-x-42

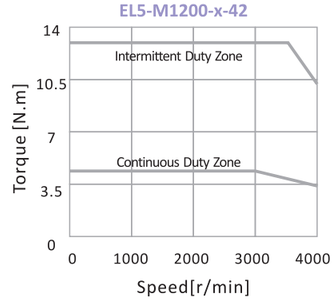

3.4 Speed-Torque Curves (Con't)

EL5-D1500-x-x	EL5-D2000-x-x	EL5-D3000-x-x
1.5 KW	2.0 KW	3.0 KW

EL5-M1500-x-51

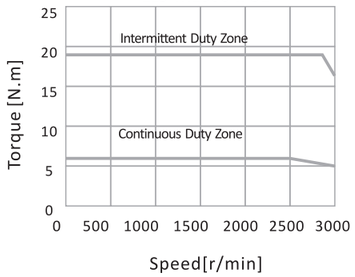

EL5-M1800-x-42

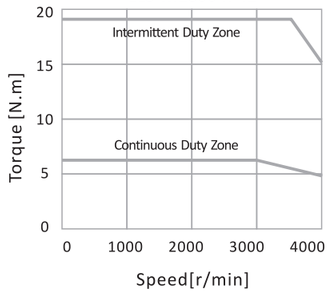

EL5-M2000-x-51

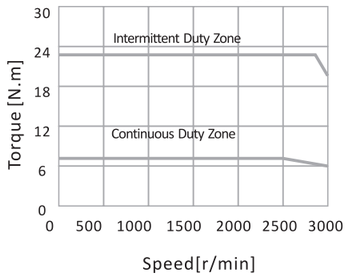

EL5-M2500-x-51



EL5-M3000-x-51

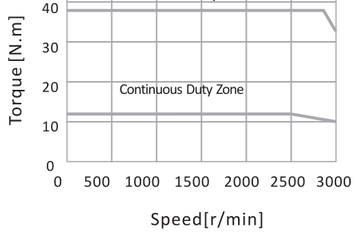

04 EL5 Series Accessories

Number	Picture	Name	Descreptions
1		**Motor Cable:** CABLE-RZ1M5-S (1.5m) CABLE-RZ3M0-S (3m) CABLE-RZ5M0-S (5m) CABLE-RZ10M0-S (10m)	Length 1.5m (Standard), 3m, 5m and 10m optional For NEMA16, NEMA24 and NEMA32 servo motors.
2		**Motor Cable:** CABLE-RZ1M5-H (1.5m) CABLE-RZ3M0-H (3m) CABLE-RZ5M0-H (5m) CABLE-RZ10M0-H (10m)	Length 1.5m (Standard), 3m, 5m and 10m optional For NEMA42 and NEMA51 servo motors.
3		**Encoder Cable:** CABLE-BM1M5-S (1.5m) CABLE-BM3M0-S (3m) CABLE-BM5M0-S (5m) CABLE-BM10M0-S (10m)	Length 1.5m (Standard), 3m, 5m and 10m optional For NEMA16, NEMA24 and NEMA32 servo motors.
4		**Encoder Cable:** CABLE-BM1M5-H (1.5m) CABLE-BM3M0-H (3m) CABLE-BM5M0-H (5m) CABLE-BM10M0-H (10m)	Length 1.5 m (Standard), 3m, 5m and 10m optional For NEMA42 and NEMA51 servo motors.
5		**RS232 Cable for ProTuner:** CABLE-ACH1000	Length 1.2 m, For the EL5 series servo drives.
6	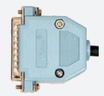	**Control Signal Connector:** HDB-44P	Control signal connector for the EL5 series servo drives
7		**USB to RS232 Converter:** NOT a standard accessory. .	Please specify when place an order if you need.
8		**External Regeneration Resistor:** NOT a standard accessory.	Please specify when place an order if you need.

04 Accessories (Con't)

Motor Cable

Motor Cable (for NEMA16 to NEMA32 motors)

Model: CABLE-RZ1M5-S, CABLE-RZ3M0-S,
CABLE-RZ5M0-S, CABLE-RZ10M0-S optional

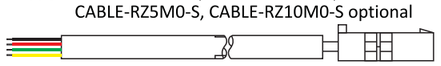

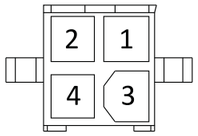

Pin	Name
1	V
2	U
3	W
4	PE

Motor Cable (for NEMA42 and NEMA51 motors)

Model: CABLE-RZ1M5-H, CABLE-RZ3M0-H,
CABLE-RZ5M0-H, CABLE-RZ10M0-H optional

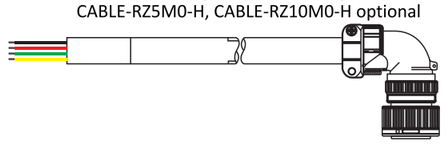

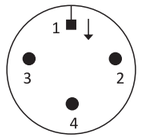

Pin	Name
1	PE
2	U
3	V
4	W

Encoder Cable

Encoder (for NEMA16 to NEMA32 motors)

Model: CABLE-BM1M5-S, CABLE-BM3M0-S,
CABLE-BM5M0-S, CABLE-BM10M0-S optional

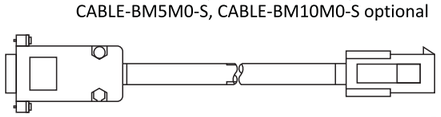

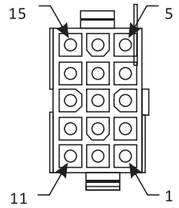

Pin	Name	Pin	Name
1	PE	5	Z-
2	+5V	6	HU+
3	GND	8	HU-
9	EA+	10	HV+
13	EA-	12	HV-
4	EB+	11	HW+
14	EB-	15	HW-
7	Z+		

Encoder Cable (for NEMA42 and NEMA51 motors)

Model: CABLE-BM1M5-H, CABLE-BM3M0-H,
CABLE-BM5M0-H, CABLE-BM10M0-H optional

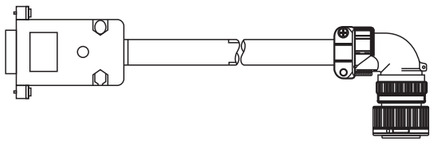

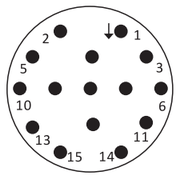

Pin	Name	Pin	Name
1	PE	9	Z-
2	+5V	10	HU+
3	GND	11	HU-
4	EA+	12	HV+
5	EA-	13	HV-
6	EB+	14	HW+
7	EB-	15	HW-
8	Z+	16	NC

05 EL5 Series Order Information

Power	Drive	Motor	Standard Accessories
50 W	 EL5－D0400－x－x	 EL5－M0050－x－16	CABLE-RZ1M5-S, CABLE-BM1M5-S CABLE-ACH1000, HDB-44P See "Accessories" section for more information.
100 W	 EL5－D0400－x－x	 EL5－M0100－x－16	CABLE-RZ1M5-S, CABLE-BM1M5-S CABLE-ACH1000, HDB-44P See "Accessories" section for more information.
200 W	 EL5－D0400－x－x	 EL5－M0200－x－24	CABLE-RZ1M5-S, CABLE-BM1M5-S CABLE-ACH1000, HDB-44P See "Accessories" section for more information.
400 W	 EL5－D0400－x－x	 EL5－M0400－x－24	CABLE-RZ1M5-S, CABLE-BM1M5-S CABLE-ACH1000, HDB-44P See "Accessories" section for more information.
600 W	 EL5－D0750－x－x	 EL5－M0600－x－24	CABLE-RZ1M5-S, CABLE-BM1M5-S CABLE-ACH1000, HDB-44P See "Accessories" section for more information.
750 W	 EL5－D0750－x－x	 EL5－M0750－x－32	CABLE-RZ1M5-S, CABLE-BM1M5-S CABLE-ACH1000, HDB-44P See "Accessories" section for more information.
1000 W	 EL5－D1000－x－x	 EL5－M1000－x－32	CABLE-RZ1M5-S, CABLE-BM1M5-S CABLE-ACH1000, HDB-44P See "Accessories" section for more information.
1000 W	 EL5－D1000－x－x	 EL5－M1000－x－51	CABLE-RZ1M5-H, CABLE-BM1M5-H CABLE-ACH1000, HDB-44P See "Accessories" section for more information.
1200 W	 EL5－D1500－x－x	 EL5－M1200－x－42	CABLE-RZ1M5-H, CABLE-BM1M5-H CABLE-ACH1000, HDB-44P See "Accessories" section for more information.
1500 W	 EL5－D1500－x－x	 EL5－M1500－x－51	CABLE-RZ1M5-H, CABLE-BM1M5-H CABLE-ACH1000, HDB-44P See "Accessories" section for more information.
1800 W	 EL5－D2000－x－x	 EL5－M1800－x－42	CABLE-RZ1M5-H, CABLE-BM1M5-H CABLE-ACH1000, HDB-44P See "Accessories" section for more information.
2000 W	 EL5－D2000－x－x	 EL5－M2000－x－51	CABLE-RZ1M5-H, CABLE-BM1M5-H CABLE-ACH1000, HDB-44P See "Accessories" section for more information.
2500 W	 EL5－D3000－x－x	 EL5－M2500－x－51	CABLE-RZ1M5-H, CABLE-BM1M5-H CABLE-ACH1000, HDB-44P See "Accessories" section for more information.
3000 W	 EL5－D3000－x－x	 EL5－M3000－x－51	CABLE-RZ1M5-H, CABLE-BM1M5-H CABLE-ACH1000, HDB-44P See "Accessories" section for more information.

06 ACS Series
AC&BLDC Servo Drives

Leadshine's fully digital ACS series servo drives are developed with 32-bit DSP control technology based on advanced control algorithm. Because of their high performance and highly competitive price, they are ideal for replacing many popular AC servo drives available on the market. The AC servo drives accept input commands of step & direction signals, so they can be used to upgrade stepper systems to servo systems without modifying control systems, offering higher precision, higher speed, lower heating and lower noise performance.

A built-in controller can be used for the testing and tuning. PC-based software and handheld configuration and tuning tools can meet different tuning environments or requirements.



Rated Power

150W	200W	400W
		

6.1 Features

- Cost-effective, 32-bit DSP control technology
- Input:18 VDC to 80 VDC, Peak Cur:18A, Cont. Cur:7.5 A (Max)
- For 25 to 400W AC & Brushless DC servo motors
- FOC-SVPWM technologies
- Opto-isolated, single-ended and differential inputs
- Support step&direction and CW/CCW pulse commands
- Electronic gear rate from 1/255 to 255
- Built-in pulse generator for the tuning and self-test
- PC-based and handheld configuration tools
- Adjustable following error lock range
- Over-voltage, over-current, encoder error detection
- 10 last errors recorded for easy troubleshooting

6.2 Typical Applications

Suitable for small to medium automation machinery and equipment, such as large format printers, engraving machines, electronics manufacturing equipment, pick and place machines, packing machines, etc. Particularly suited to applications require high speed, high precision, high reliability, low motor noise and with DC power input.



Packing Machines



Printing Machines



Pick and place Machines

Electronic Manufacturing



CNC Machines

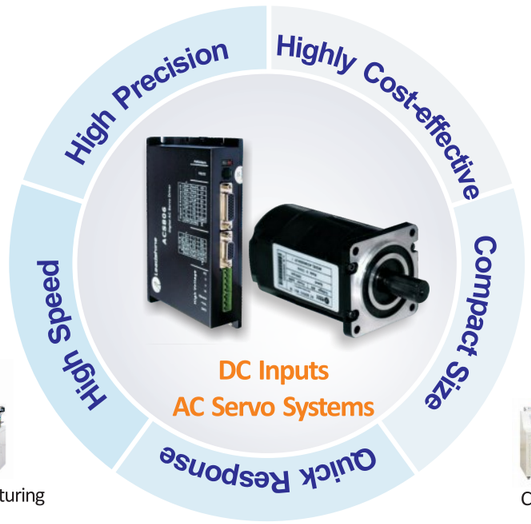

6.3 Part Number

ACS ① **8** ② **06** ③

①	**Series**	ACS: ACS Series AC&BLDC Servo Drives
②	**Maximum Input Voltage**	8: 80 VDC 6: 60 VDC 3: 30 VDC
③	**Maximum Continuous Current**	06: 6 A

6.4 Specifications

Electrical Specifications

Parameters	ACS306	ACS606	ACS806	ACS806-DA
Maximum Continuous Power	150 W	200 W	400 W	400 W
Maximum Continuous Current	6 A	6 A	6 A	6 A
Peak Current	15 A	18 A	18 A	18 A
Input Voltage	18 to 30 VDC	18 to 60 VDC	20 to 80 VDC	20 to 80 VDC
Logical Signal Input Current	7 to 20 mA	7 to 20 mA	7 to 20 mA	7 to 20 mA
Pulse Input Frequency	0 to 250 kHz	0 to 250 kHz	0 to 600 kHz	0 to 600 kHz
Isolation Resistance	500 MΩ	500 MΩ	500 MΩ	500 MΩ
Current Provided for Encoder	100 mA	100 mA	100 mA	100 mA

Control Specifications

Parameters	ACS306	ACS606	ACS806	ACS806-DA
Command Input	Step/Direction	Step/Direction	Step/Direction CW/CW	Step/Direction CW/CCW ±10 V Analog Input
Enable/Disable Input	Differential	Differential	Differential	Differential
Alarm Signal Output	Isolated OC Output	No	Isolated OC Output	Isolated OC Output
End Limit Input	No	No	Positive & Negative	Positive & Negative
In Position Signal Output	No	No	Isolated OC Output	Isolated OC Output
Encoder Feedback	A, B, Z (Differential)	A, B, Z (Differential)	A, B, Z (Differential)	A, B, Z (Differential)
Hall Effect Sensor Feedback	U, V, W (Single-ended)	U, V, W (Single-ended)	U, V, W (Differential)	U, V, W (Differential)
Encoder Output	No	No	A, B, Z (Differential)	A, B, Z (Differential)
Communication Interface	RS232	RS232	RS232	RS232
Braking Resistor	No	No	Support External BR	Support External BR

Configuration and Tuning Tools

Parameters	ACS306	ACS606	ACS806	ACS806-DA
PC based tuning software	ProTuner	ProTuner	ProTuner	ProTuner
Handheld tuning unit	STU-ACS	STU-ACS	STU-ACS	STU-ACS

Mechanical Specifications

Parameters	ACS306	ACS606	ACS806	ACS806-DA
Size (mm)	116×69.2×26.5	118×75.5×34	166×97×32	166×97×32
Weight (g)	280	280	430	430

Powering Motors

Parameters	ACS306	ACS606	ACS806	ACS806-DA
Powering Motors	18 - 30 VDC, 10-150 W Brushless Servo Motors: BLM57025, BLM57050	18 - 60 VDC, 10-200 W Brushless Servo Motors: BLM57090, BLM57130, BLM57180, 57BL180	20- 80 VDC, 50-400 W Brushless Servo Motors: ACM601V36, ACM602V36 ACM602V60, ACM604V60	20- 80 VDC, 50-400 W Brushless Servo Motors: ACM601V36, ACM602V36 ACM602V60, ACM604V60

Operating Environment

Cooling		Natural cooling or Forced cooling
Operating Environment	Environment	Avoid dust, oil fog and corrosive gases
	Ambient Temperature	0 to +50 °C.
	Humidity	40% RH to 90%RH, no condensation
	Vibration	5.9 m/s^2 MAX
Storage Temperature		-20 °C to 80 °C

6.5 System Tuning and Configuration

Configuration and Tuning Tools

Leadshine offers PC based and handheld configuration & tuning tools to meet different requirements and configuration and tuning environments. The user can tune the ACS series drives with two different tuning tools, including ProTuner (Windows based setup software) and STU-ACS (Handheld servo tuning unit).

STU-ACS (Handheld Servo Tuning Unit)

- Similar to most HMI of servo drives from other manufacturers
- PID parameter settings for position loop
- Electronic gear rate setting from 1/255 to 255
- Position following error range setting
- Real-time current, velocity, position following error display.
- Parameter settings for self motion test (with trapezoidal velocity profile)
- Read the latest 10 failure events and clear the events



Notes:

1. Leadshine offers a special cable for communication between the drive and STU-ACS handheld tuner.

ProTuner (Windows Based Setup Software)

- Upload and Download parameter settings
- Digital oscilloscope for real-time current, velocity, position following error display. Measurements can be taken using the mouse pointer.
- PID parameter settings for position loop
- PI parameter settings for current loop
- Electronic gear rate setting from 1/255 to 255
- Position following error range setting
- Encoder resolution setting
- Parameter settings for self motion test (with trapezoidal velocity profile)
- Read the latest 10 failure events and clear the events

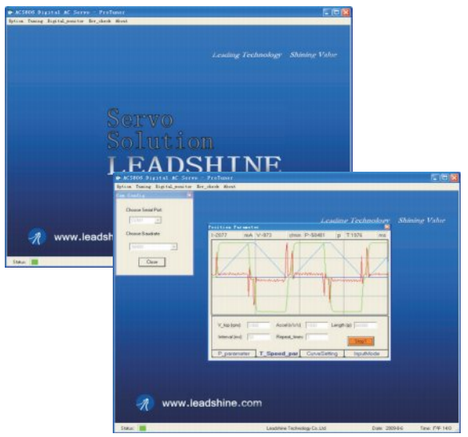

Notes:

1. One PC RS232 interface or one USB port for USB-to-RS232 converter is necessary.
2. Leadshine offers special cable (part number: Cable-PC) for communication between ProTuner and the drive.

6.6 Wiring Examples

ACS306, ACS606

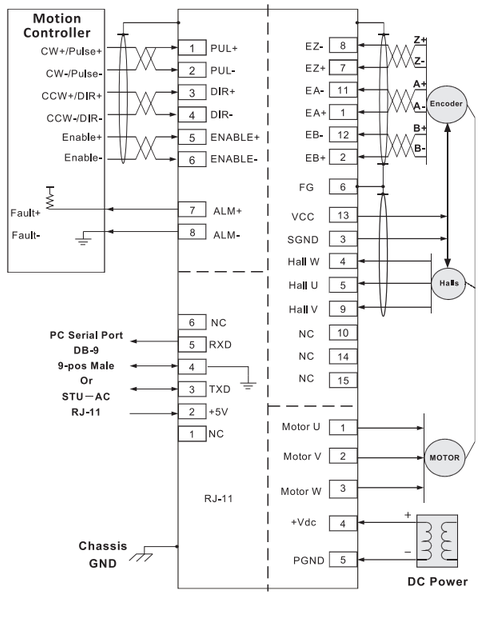

ACS806

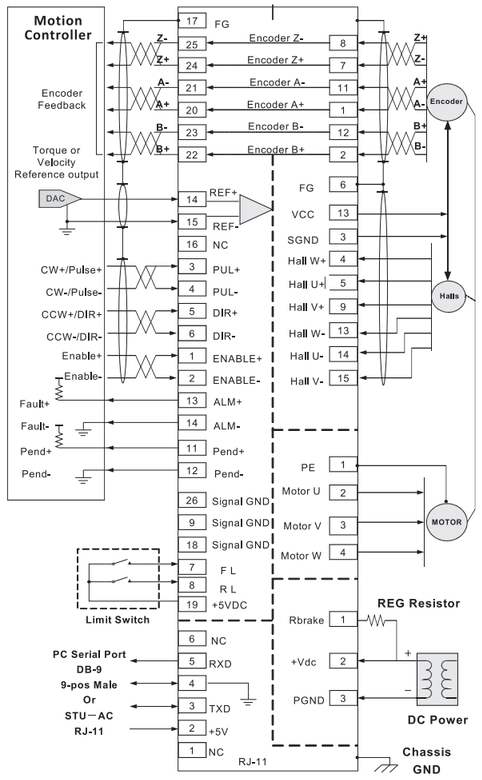

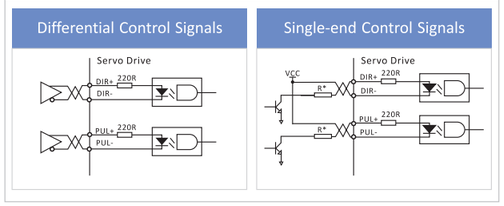

Notes:

1. The ACS606 does NOT have ALM+ and ALM- outputs.
2. The ACS806-DA supports torque and velocity mode, while the ACS806 does NOT support torque and velocity mode.
3. The drive can accept differential and single-ended inputs, including open-collector and PNP output. Recommend use differential (line driver) control signals to increase noise immunity of the system.
4. *Series connect resistors for current-limiting when +12V or +24V single-ended control signals are used. R=1K (Power>0.25W), if Vcc=12 V, and R=2K (Power>0.25W), if Vcc=24 V.

6.7 Mechanical Specifications

Units: mm 1 inch = 25.4 mm

ACS306, ACS606

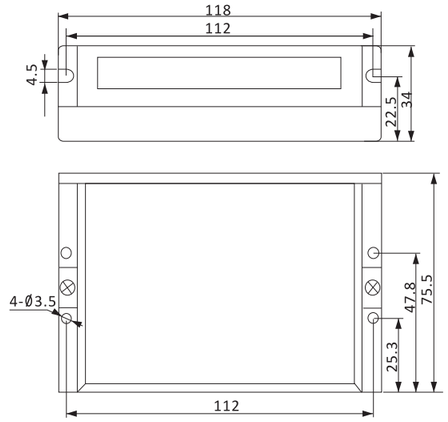

ACS806

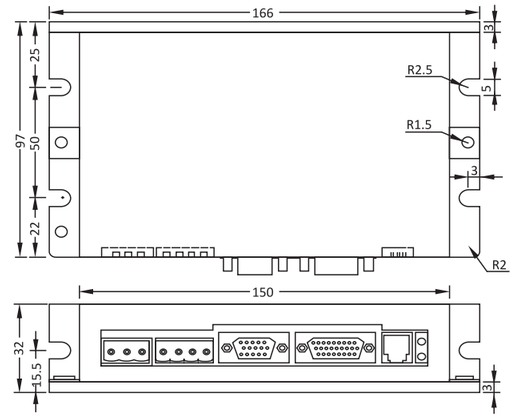

07 ACM/BLM Series AC/BLDC Servo Motors

Frame Size	ACM Series: 60mm (NEMA24)		BLM Series: 57mm (NEMA23)			
Rated Power	ACM Series: 100W	200W	400W			
	BLM Series: 25W	50W	90W	130W	180W	

The ACM series of AC servo motors and BLM series of brushless DC servo motors offer high performance with models ranging from 25W to 400W. Mounting is compatible with NEMA24 and NEMA23 motors on the market. Standard models come with a standard 2500-line or 1000-line differential encoder with index signal (A, B, Z), and Hall sensors (U, V, W).

When driven by Leadshine ACS series servo drives, these motors can meet application requirements from as low as 1 rpm to as high as 4000 rpm, offering high reliability, high speed, high precision, low motor noise and heating motion control solutions. The 57BL180 features a compact, screw-mount body.

7.1 Part Number

ACM 60 2 V36 — 01 — 2500
① ② ③ ④ ⑤ ⑥

①	**Series**	ACM: ACM Series			
②	**Frame Size**	60: 60mm (NEMA24)			
③	**Power**	1: 100W	2: 200W	4: 400W	
④	**Rated Voltage**	V36: 36 VDC	V60: 60 VDC		
⑤	**Motor Type**	01: White	02: Black		
⑥	**Encoder Resolution**	1000: 1000-line(4000ppr)	2500: 2500-line(10000ppr)		

Notes:
The ACM motors with brakes or different rated voltages are also available. Contact Leadshine or visit our website for more information please.

BLM 57 025 — 1000
① ② ③ ④

①	**Series**	BLM: BLM Series				
②	**Frame Size**	57: 57mm (NEMA23)				
③	**Power**	025: 25W	050: 50W	090: 90W	130: 130W	180: 180W
④	**Encoder Resolution**	1000: 1000-line(4000ppr)		2500: 2500-line(10000ppr)		

Notes:
1. The 57BL180 is a screw mounted model and the above "Part Number" does not apply.
2. Rated voltage of the BLM57025, BLM57050 is 24VDC, and rated voltage of the BLM57090, BLM57130, BLM57180 and 57BL180 is 36VDC.
3. Standard models of the BLM series come with a standard 1000-line differential encoder with index slits (A, B, Z), and Hall Sensors (U, V, W).

7.2 Electrical Specifications

ACM Series, NEMA24 (□ 60 mm) Power: 100W, 200W, 400W




Specifications

Parameters	Units	ACM601V36-01	ACM602V36-01	ACM604V60-01
Rated Voltage	VDC	36	36	60
Rated Power	W	100	200	400
Rated Torque	Nm	0.31	0.64	1.27
Rated Current	A	3.7	7.6	8.4
Rated Speed	RPM	3000	3000	3000
Peak Torque	Nm	0.93	1.91	3.82
Peak Current	A	11	22	25
Torque Constant	Nm/A	0.084	0.092	0.161
Back EMF Constant	V/krpm	7	3.21	5.54
Inertia	$Kg*m^2\times10^{-5}$	1.1	1.76	3.55
Poles	-	8	8	8

Operating Environment

Parameters	Descriptions	Parameters	Descriptions
Insulation Level	B	Insulation Voltage	DC 500V, 60seconds
Insulation Resistence	DC 500V, above 10MΩ	Vibration	<2.5 G
Ambient Temperature	0 to 40 °C	Humidity	20%RH to 90%RH
Storage Temperature	-20 to 70 °C	Mounting Method	Flange Mounted

BLM Series, NEMA23 (□ 57 mm) Power: 25W to 180W



Specifications

Parameters	Units	BLM57025	BLM57050	BLM57090	BLM57130	BLM57180	57BL180
Rated Voltage	VDC	24	24	36	36	36	36
Rated Power	W	25	50	90	130	180	180
Rated Torque	Nm	0.08	0.16	0.29	0.41	0.57	0.57
Rated Current	A	1.6	3	3.45	5.3	6.7	7
Rated Speed	RPM	3000	3000	3000	3000	3000	3000
Peak Torque	Nm	0.24	0.48	0.87	1.23	1.71	1.71
Peak Current	A	4.8	9	10.35	15.9	20	20.5
Torque Constant	Nm/A	0.05	0.053	0.084	0.078	0.085	0.089
Back EMF Constant	V/krpm	5.2	5.55	8.8	8.2	8.9	9.3
Inertia	$Kg*m^2\times10^{-5}$	0.3	0.75	1.19	1.73	2.3	2.3
Poles	-	4	4	4	4	4	4

Operating Environment

Parameters	Descriptions	Parameters	Descriptions
Insulation Level	B	Insulation Voltage	DC500V, 60seconds
Insulation Resistence	DC 500V, above 10MΩ	Vibration	<2.5 G
Ambient Temperature	0 to 40 °C	Humidity	20%RH to 90%RH
Storage Temperature	-20 to 70 °C	Mounting Method	Flange Mounted

7.3 Mechanical Specifications

Units: mm 1 inch = 25.4 mm

ACM601V36-01

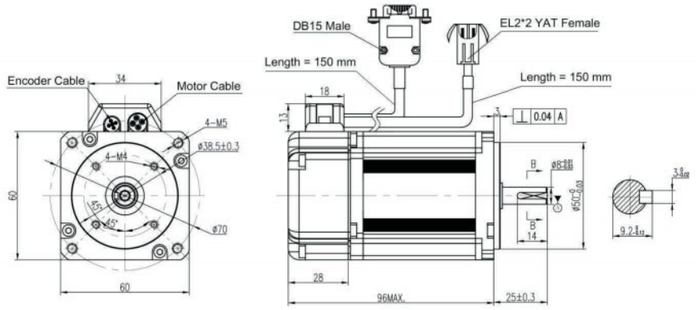

ACM602V36-01

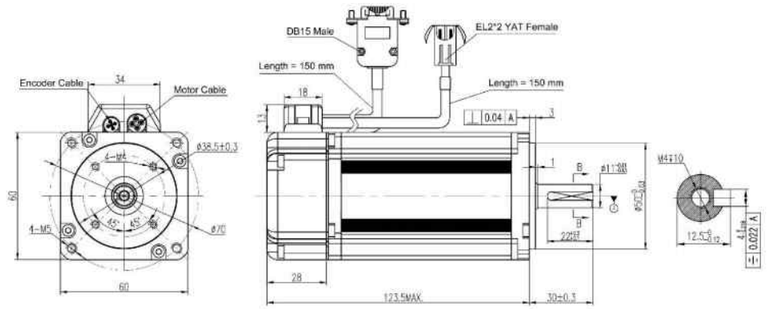

ACM604V60-01

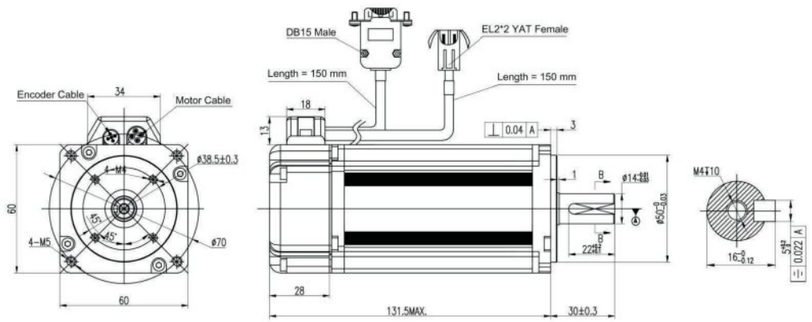

Installation Notes:

(1) Do not give strong impact shock to the motor shaft.

(2) Make sure the hall sensor signals U/V/W are connected to the drive correctly..

(3) The motors are not water proof. Please contact Leadshine if you need a water proof product.

(4) Keep the ambient temperature within the permissible temperature range (0 to 40℃) for the product. Use force cooling methord if necessary.

(5) Motors with brakes and oil seal are available. Please contact Leadshine if you need.

BLM57025, BLM57050, BLM57090, BLM57130, BLM57180

BLM57025 L = 70 mm
BLM57050 L = 80 mm
BLM57090 L = 100 mm
BLM57130 L = 120 mm
BLM57180 L = 140 mm

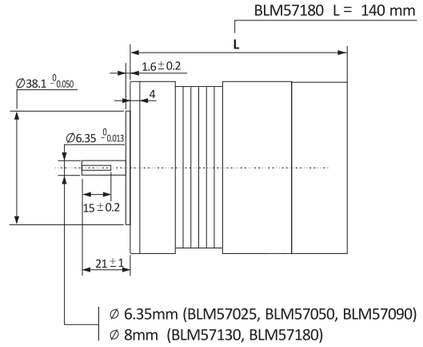

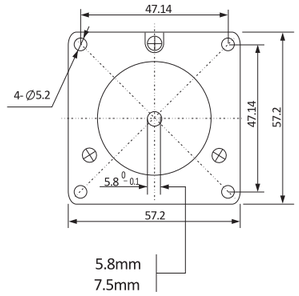



57BL180

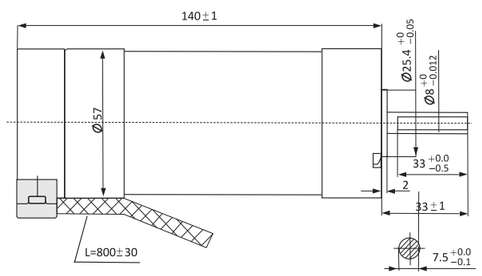

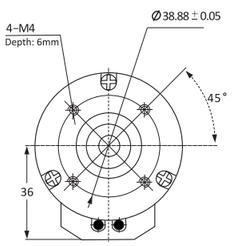



Installation Notes:

(1) Do not give strong impact shock to the motor shaft.

(2) Make sure the hall sensor signals U/V/W are connected to the drive correctly..

(3) The motors are not water proof. Please contact Leadshine if you need a water proof product.

(4) Keep the ambient temperature within the permissible temperature range (0 to 40 °C) for the product. Use force cooling methord if necessary.

(5) The thread depth of the M4 mounting holes of the 57BL180 is 6.0 mm. Do not screw more than 6.0 mm as this will cause damage to the motor.

7.4 Speed-Torque Curves

ACS806
400 W

ACM601V36

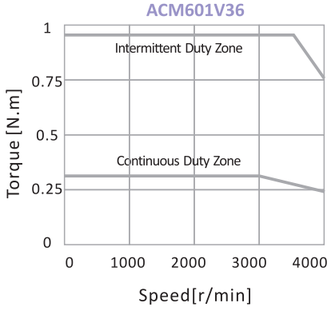

ACM602V36

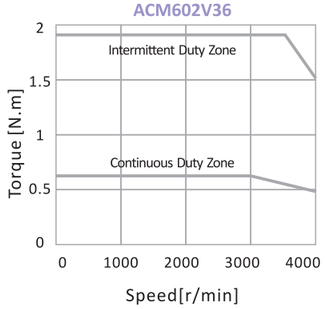

ACM604V60

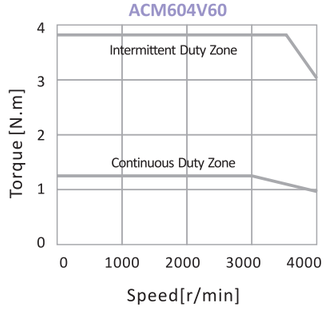

ACS306	ACS606
150 W	200 W

BLM57025

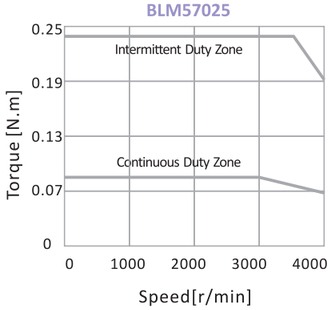

BLM57050

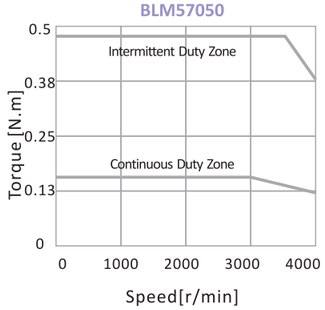

BLM57090

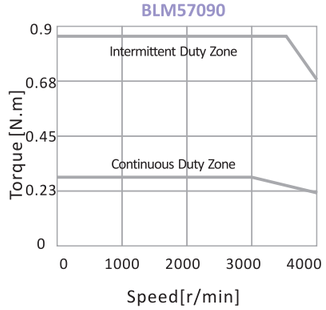

BLM57130

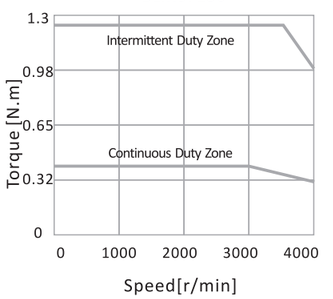

BLM57180

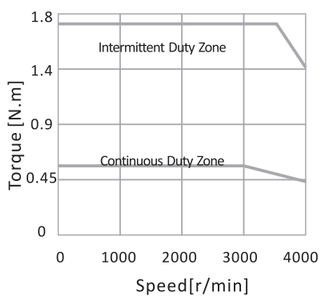

57BL180

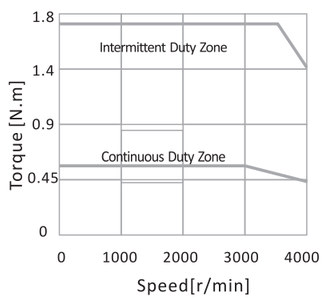

08 Low–Medium Brushless Servos
Order Information

Power	Drive	Motor	Accessories
100 W	 ACS806	 ACM601V36	CABLE-ENCODER (Encoder cable. Length is optional, 3m standard, 1.2m, 5m,10m optional.) CABLE-ACM WINDING (Motor cable. Length is optional, 3m standard, 1.2m, 5m,10m optional.) CABLE-PC (RS232 cable for using ProTuner. 1.5m standard.) CABLE-DB26 (Control signal cable. Length is optional, 2.2m standard, 0.6m, 1.2m optional.)
200 W	 ACS806	 ACM602V36	CABLE-ENCODER (Encoder cable. Length is optional, 3m standard, 1.2m, 5m,10m optional.) CABLE-ACM WINDING (Motor cable. Length is optional, 3m standard, 1.2m, 5m,10m optional.) CABLE-PC (RS232 cable for using ProTuner. 1.5m standard.) CABLE-DB26 (Control signal cable. Length is optional, 2.2m standard, 0.6m, 1.2m optional.)
400 W	 ACS806	 ACM604V60	CABLE-ENCODER (Encoder cable. Length is optional, 3m standard, 1.2m, 5m,10m optional.) CABLE-ACM WINDING (Motor cable. Length is optional, 3m standard, 1.2m, 5m,10m optional.) CABLE-PC (RS232 cable for using ProTuner. 1.5m standard.) CABLE-DB26 (Control signal cable. Length is optional, 2.2m standard, 0.6m, 1.2m optional.)
25 W	 ACS306/ACS606	 BLM57025	CABLE-ENCODER (Encoder cable. Length is optional, 3m standard, 1.2m, 5m,10m optional.) CABLE-BLM WINDING (Motor cable. Length is optional, 3m standard, 1.2m, 5m,10m optional.) CABLE-PC (RS232 cable for using ProTuner. 1.5m standard.)
50 W	 ACS306/ACS606	 BLM57050	CABLE-ENCODER (Encoder cable. Length is optional, 3m standard, 1.2m, 5m,10m optional.) CABLE-BLM WINDING (Motor cable. Length is optional, 3m standard, 1.2m, 5m,10m optional.) CABLE-PC (RS232 cable for using ProTuner. 1.5m standard.)
90 W	 ACS606	 BLM57090	CABLE-ENCODER (Encoder cable. Length is optional, 3m standard, 1.2m, 5m,10m optional.) CABLE-BLM WINDING (Motor cable. Length is optional, 3m standard, 1.2m, 5m,10m optional.) CABLE-PC (RS232 cable for using ProTuner. 1.5m standard.)
130 W	 ACS606	 BLM57130	CABLE-ENCODER (Encoder cable. Length is optional, 3m standard, 1.2m, 5m,10m optional.) CABLE-BLM WINDING (Motor cable. Length is optional, 3m standard, 1.2m, 5m,10m optional.) CABLE-PC (RS232 cable for using ProTuner. 1.5m standard.)
180 W	 ACS606	 BLM57180	CABLE-ENCODER (Encoder cable. Length is optional, 3m standard, 1.2m, 5m,10m optional.) CABLE-BLM WINDING (Motor cable. Length is optional, 3m standard, 1.2m, 5m,10m optional.) CABLE-PC (RS232 cable for using ProTuner. 1.5m standard.)
180 W	 ACS606	 57BL180	CABLE-ENCODER (Encoder cable. Length is optional, 3m standard, 1.2m, 5m,10m optional.) CABLE-BLM WINDING (Motor cable. Length is optional, 3m standard, 1.2m, 5m,10m optional.) CABLE-PC (RS232 cable for using ProTuner. 1.5m standard.)

Note: The STU-ACS and the cable between the STU-ACS and drive are NOT standard accessories. Please specify when you place an order if you need.

09 iSV Series Integrated Servos

Leadshine's iSV series integrated servos are one of the most compact servo systems available on the market. An iSV integrated servo has a servo motor (PMSM or BLDC optional) and an advanced DSP servo drive. At very compact size and with all components integrated, the iSV series servos can save mounting space, eliminate encoder connection and motor wiring time, increase reliability, and lower cable and labor cost. The drive takes step & direction, RS485 or CANopen commands, and is capable of outputting in position and fault signals back to the master controller or external devices for complete system controls.



Rated Power

90W - 180W NEMA23(57mm)	25W - 75W NEMA17(42mm)	100W - 400W NEMA24(60mm)
		
iSV-B23090 iSV-B23130 iSV-B23180	iSV-B17025 iSV-B17050 iSV-B17075	iSV-A24100 iSV-A24200 iSV-A24400

9.1 Features

- **Highly Integrated,** Servo motor + advanced DSP servo drive
- FOC-SVPWM technologies
- Lower labor cost
- Lower cable cost
- Support step & direction, RS485 or CANopen commands
- Built-in pulse generator for the tuning and self-test
- Compact size, Save mounting space

Lower Labor Cost + **Lower Cable Cost** + **Increase Reliability** + **Save Mounting Space**

9.2 Typical Applications

Suitable for small to medium automation machinery and equipment, such as large format printers, engraving machines, electronics manufacturing equipment, pick and place machines, packing machines, etc. Particularly suited to applications require high speed, high precision, high reliability, low motor noise and with DC power input at highly compact size.



Printing Machines



Electronic Manufacturing

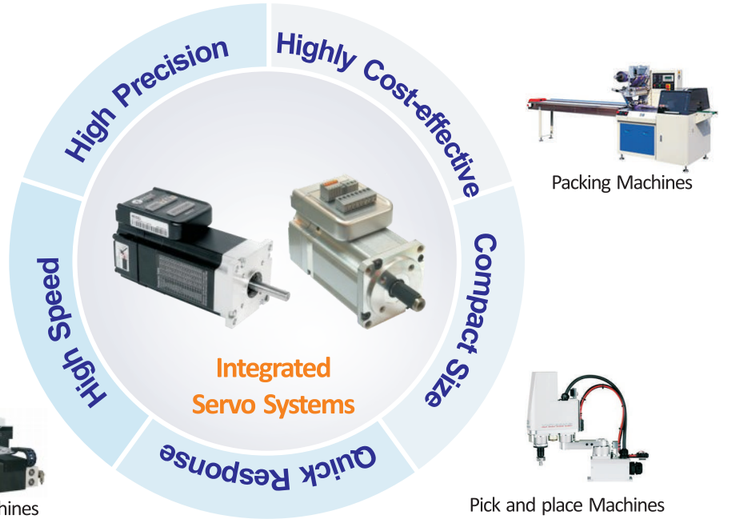

Packing Machines



CNC Machines

Pick and place Machines

9.3 Part Number

iSV – **B** **23** **130** – **C** – **01**

① ② ③ ④ ⑤ ⑥

①	**Series**	iSV: iSV Series integrated servos	
②	**Motor Type**	A: AC servo motor (PMSM)	B: BLDC
③	**Frame Size**	17: NEMA17 (42mm)	23: NEMA23 (57mm) 24: NEMA24 (60mm)
④	**Rated Power**	025: 25W 050: 50W 075: 75W 090: 90W 100: 100W 130: 130W 180: 180W 200: 200W 400: 400W	
⑤	**Communication Type**	Blank: Step & Direction	R: RS485 C: CANopen
⑥	**Flange Type**	Blank: standard 01: Type01	*See more details in “mechanical specifications” section.

9.4 Specifications

Electrical Specifications (Integrated Drives)

Parameters	iSV-B23090 / iSV-B23090-01	iSV-B23130 / iSV-B23130-01	iSV-B23180 / iSV-B23180-01
Operating Voltage (VDC)	20 to 50, and 36 recommended	20 to 50, and 36 recommended	20 to 50, and 36 recommended
Maximum Continuous Current (A)	6	6	6
Pulse Input Frequency (kHz)	200 / 500 software configurable	200 / 500 software configurable	200 / 500, software configurable
Logical Signal Voltage (VDC)	5 - 24	5 - 24	5 - 24
Logical Signal Input Current (mA)	7 - 16	7 - 16	7 - 16
Isolation Resistance (MΩ)	100	100	100

Motor Specifications

Parameters	iSV-B23090 / iSV-B23090-01	iSV-B23130 / iSV-B23130-01	iSV-B23180 / iSV-B23180-01
Rated Voltage (VDC)	36	36	36
Rated Power (W)	90	130	180
Rated Torque (Nm)	0.30	0.45	0.6
Peak Torque (Nm)	0.90	1.1	1.5
Rated Speed (RPM)	3000	3000	3000
Peak Speed (RPM)	4000	4000	4000
Encoder Resolution (Line)	1000 (4000ppr)	1000 (4000ppr)	1000 (4000ppr)
Weight (kg)	0.95	1.25	1.54

Operating Environment

Cooling		Natural cooling or Forced cooling
Operating Environment	Environment	Avoid dust, oil fog and corrosive gases
	Ambient Temperature	0 to +40 °C (32 °F to 104 °F).
	Humidity	40% RH to 90%RH, no condensation
	Vibration	5.9 m/s^2 MAX
	Operating Temperature (Heat Sink)	70 °C (158 °F) Max
Storage Temperature		-20 °C to 65 °C (-4 °F to 149 °F)

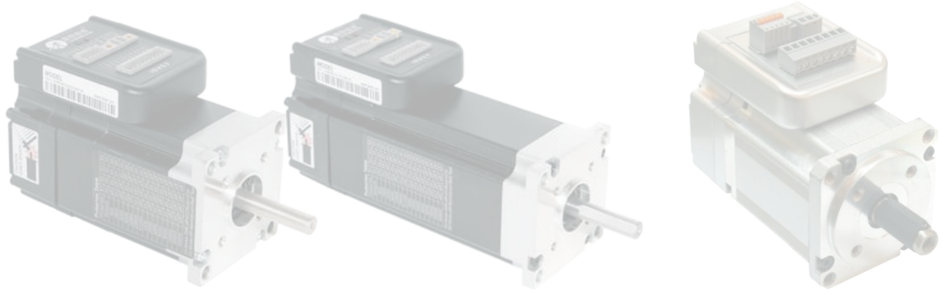

Available time for the iSV-A24100, iSV-A24200, iSV-A24400, iSV-B17025, iSV-B17050, iSV-B17075 is to be determined.
Please contact Leadshine or visit Leadshine's website at www.leadshine.com for the latest information about the iSV series integrated servos.

9.5 Operation Modes

1. Step & Direction

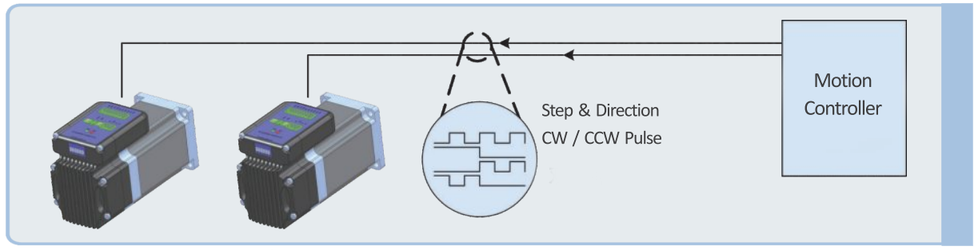

- Support step & direction and CW/CCW pulse commands
- Compatible with 5 to 24 V command signals

2. RS485

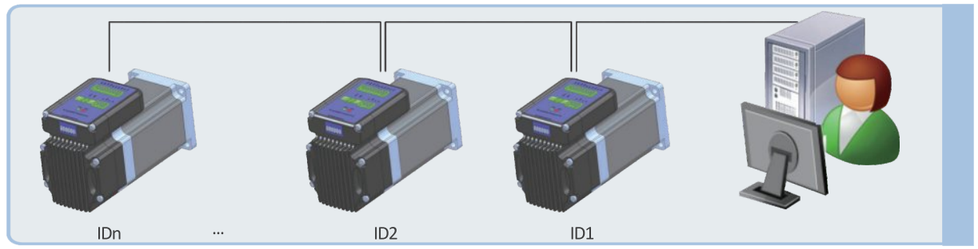

- One host up to 32 drives
- Can be used with either 2-wire (half-duplex) or 4-wire RS485 (full-duplex) implementation
- DLL is available for API function calling
- Easy to wire and build multi-axis systems

3. CANopen

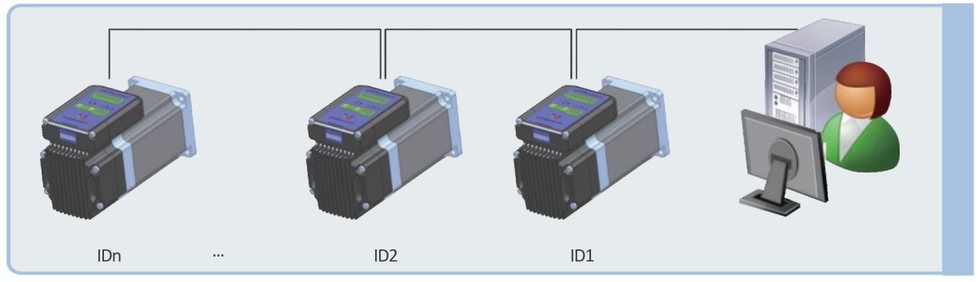

- One host up to 127 drives
- CANopen standards: CiA Standard 301 (DS301), CiA Standard 402 (DSP402)
- Up t 1 Mbit/sec speeds possible
- Easy to wire and build multi-axis systems

9.6 Mechanical Specifications

Units: mm 1 inch = 25.4 mm

iSV-B23090

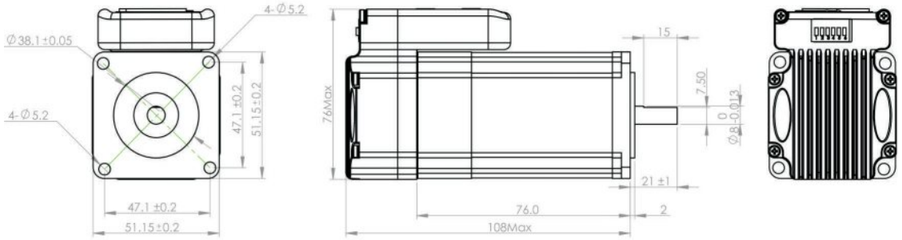

iSV-B23090–01

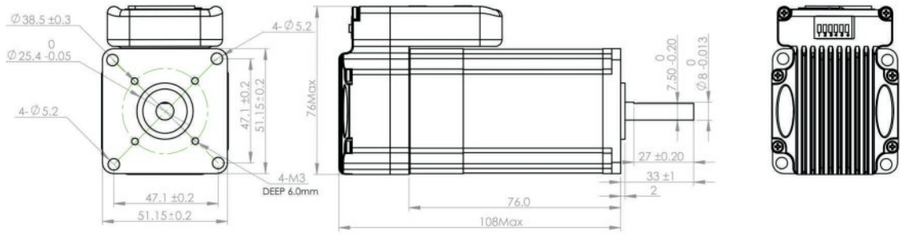

iSV-B23130

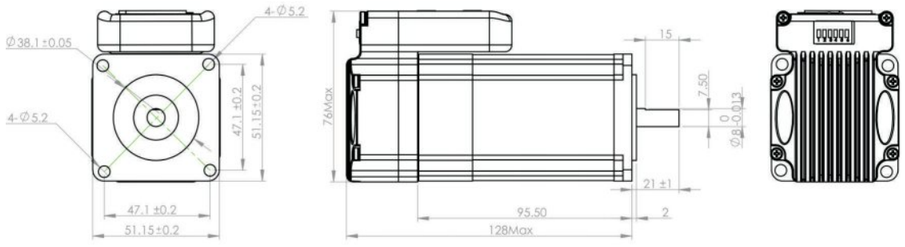

Installation Notes:

(1) Do not give strong impact shock to the motor shaft.

(2) The motors are not water proof. Please contact Leadshine if you need a water proof product.

(3) Keep the ambient temperature within the permissible temperature range (0 to 40 °C) for the product. Use force cooling methord if necessary.

Available time for the iSV-A24100, iSV-A24200, iSV-A24400, iSV-B17025, iSV-B17050, iSV-B17075 is to be determined.
Please contact Leadshine or visit Leadshine's website at www.leadshine.com for the latest information about the iSV series integrated servos.

iSV-B23130-01

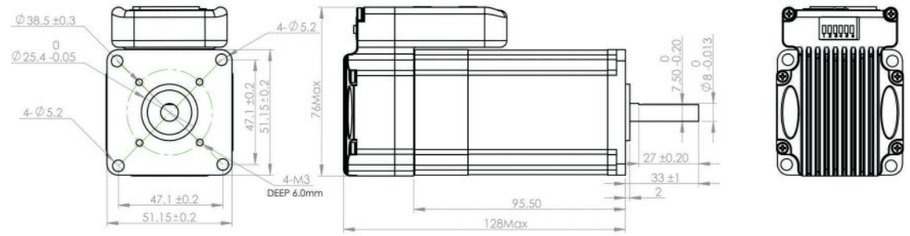

iSV-B23180

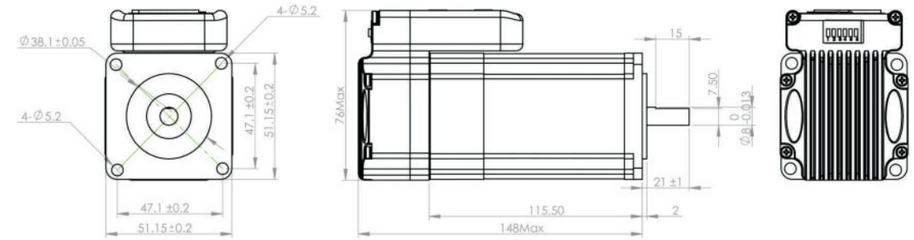

iSV-B23180-01

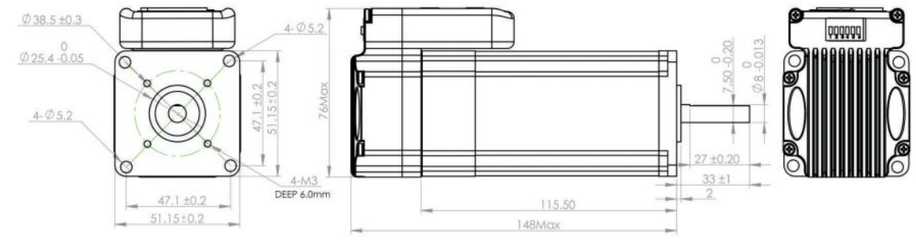

Installation Notes:

(1) Do not give strong impact shock to the motor shaft.

(2) The motors are not water proof. Please contact Leadshine if you need a water proof product.

(3) Keep the ambient temperature within the permissible temperature range (0 to 40 °C) for the product. Use force cooling methord if necessary.

Available time for the iSV-A24100, iSV-A24200, iSV-A24400, iSV-B17025, iSV-B17050, iSV-B17075 is to be determined.
Please contact Leadshine or visit Leadshine's website at www.leadshine.com for the latest information about the iSV series integrated servos.

10 DCS Series DC Servo Drives

The DCS series drives are fully digital brushed servo drives developed with high performance DSP and advanced algorithms for smooth motion control. Opto-isolated step and direction control inputs allow the drives to be drop-in replacements for stepper motor drives. In low power motion control applications DC servo motor systems perform as well as or even better than AC servo motor systems with high precision, high reliability and low noise at far lower costs.

The DCS series drives are easy to use. Leadshine offers PC-based software ProTuner for Windows. A handheld tuning and configuration tool, the STU-DCS allows configuration of the drives out in the field.

The DCS303 is a micro-size (86×55.5×20.5 mm or 3.4×2.2×0.81 inches) brushed DC servo drive. It is ideal for low power applications with limited mounting space.

The DSC810S is designed to replace the DB810-50V which was widely used in inkjet printers. It offers improved performance with the same electrical connections.

The DCS810 accepts differential command and encoder feedback inputs, offering better anti-interference performance.



Rated Power

90W	400W	400W
		

10.1 Features

- Advanced DSP control technology for smooth motion
- 18 VDC to 80 VDC supply range and capable of providing 10 A continuous and 20 A peak current
- Suitable for 10 W to 400 W brushed DC servo motors
- Position control with 4 × encoder resolution accuracy
- Adjustable position following error alarm range
- Electronic gearing with adjustable ratio from 1/255 to 255
- Built-in pulse generator for servo tuning and self-test
- Support step&direction and CW/CCW pulse commands
- Opto-isolated inputs supporting single-ended or differential signals
- PC-based and handheld configuration tools available
- Over-current, over-voltage, under-voltage, phase error, encoder error and position following error protections
- 10 error history log for easy troubleshooting

10.2 Typical Applications

Widely used in large format inkjet printers, solvent printers, small and medium engraving machines, electronic manufacturing, CNC machines, packing machines and production line equipment. These brushed DC servo drives are particularly suited to systems that require high precision and high speed at low cost.



10.3 Part Number

DCS	8	10	S
①	②	③	④

①	**Series**	DCS: DCS Series DC Servo Drives	
②	**Maximum Input Voltage**	8: 80 VDC 3: 30 VDC	
③	**Maximum Continuous Current**	10: 10 A	3: 3A
④	**Special Model Symbol**	Blank: Standard	S: Single-ended input

10.4 Specifications

Electrical Specifications

Parameters	DCS303	DCS810	DCS810S
Maximum Continuous Power	90 W	400 W	400 W
Maximum Continuous Current	3 A	10 A	10 A
Peak Current	15 A	20 A	20 A
Input Voltage	18 to 30 VDC	18 to 80 VDC	18 to 80 VDC
Logical Signal Input Current	7 to 20 mA	7 to 20 mA	7 to 20 mA
Pulse Input Frequency	0 to 250 kHz	0 to 250 kHz	0 to 250 kHz
Isolation Resistance	500 MΩ	500 MΩ	500 MΩ
Current Provided for Encoder	50 mA	50 mA	50 mA

Control Specifications

Parameters	DCS303	DCS810	DCS810S
Command Input	Step/Direction Single-ended	Step/Direction & CW/CCW Single-ended & Differential	Step/Direction & CW/CCW Single-ended
Enable/Disable Input	Single-ended	Differential	Differential
Alarm Signal Output	Isolated, OC Output	No	NONE-Isolated, OC Output
Communication Connector	B4B-PH	RJ11	RJ11
Communication Interface	RS232	RS232	RS232
Encoder Feedback	A, B (Single-ended)	A+, A-, B+, B- (Differential)	A, B (Single-ended)

Configuration and Tuning Tools

Parameters	DCS303	DCS810	DCS810S
PC based tuning software	ProTuner	ProTuner	ProTuner
Handheld tuning unit	STU-DCS	STU-DCS	STU-DCS

Mechanical Specifications

Parameters	DCS303	DCS810	DCS810S
Size (mm)	86×55.5×20.5	116×69.2×26.5	116×69.2×26.5
Weight (g)	100	210	212

Powering Motors

Parameters	DCS303	DCS810	DCS810S
Powering Motors	18 to 30 VDC brush DC servo motors with single-ended encoder, power up to 90W	18 to 80 VDC brush DC servo motors with differential encoder, power up to 400W	18 to 80 VDC brush DC servo motors with single-ended encoder, power up to 400W

Operating Environment

Cooling		Natural cooling or Forced cooling
Operating Environment	Environment	Avoid dust, oil fog and corrosive gases
	Ambient Temperature	0 to +50 °C.
	Humidity	40% RH to 90%RH, no condensation
	Vibration	5.9 m/s^2 MAX
Storage Temperature		-20 °C to 80 °C

10.5 System Tuning and Configuration

Configuration and Tuning Tools

Leadshine offers PC based and handheld configuration & tuning tools to meet different requirements and configuration and tuning environments. The user can tune the DCS series drives with two different tuning tools, including ProTuner (Windows based setup software) and STU-DCS (Handheld servo tuning unit).

STU-DCS (Handheldl Servo Tuning Unit)

- Similar to most HMI of servo drives from other manufacturers
- PID parameter settings for position loop
- Electronic gear rate setting from 1/255 to 255
- Position following error range setting
- Real-time current, velocity, position following error display.
- Parameter settings for self motion test (with trapezoidal velocity profile)
- Read the latest 10 failure events and clear the events



Notes:

1. Leadshine offers a special cable for communication between the drive and STU-DCS handheld tuner.

ProTuner (Windows Based Setup Software)

- Upload and Download parameter settings
- Digital oscilloscope for real-time current, velocity, position following error display. Measurements can be taken using the mouse pointer.
- PID parameter settings for position loop
- PI parameter settings for current loop
- Electronic gear rate setting from 1/255 to 255
- Position following error range setting
- Encoder resolution setting
- Parameter settings for self motion test (with trapezoidal velocity profile)
- Read the latest 10 failure events and clear the events

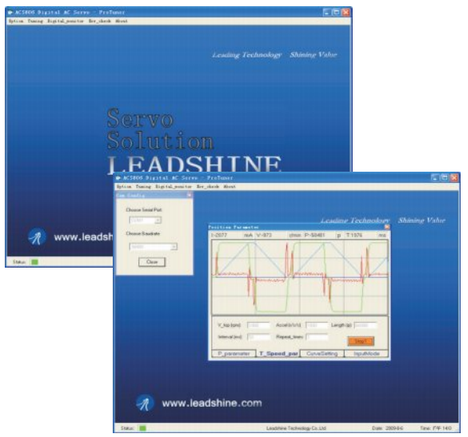

Notes:

1. One PC RS232 interface or one USB port for USB-to-RS232 converter is necessary.
2. Leadshine offers special cable for communication between ProTuner and the drive.

10.6 Wiring Examples

DCS303

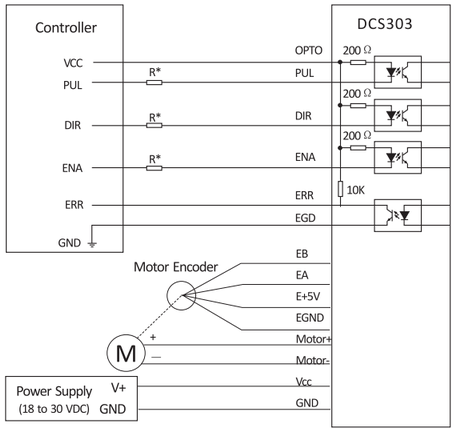

DCS810S

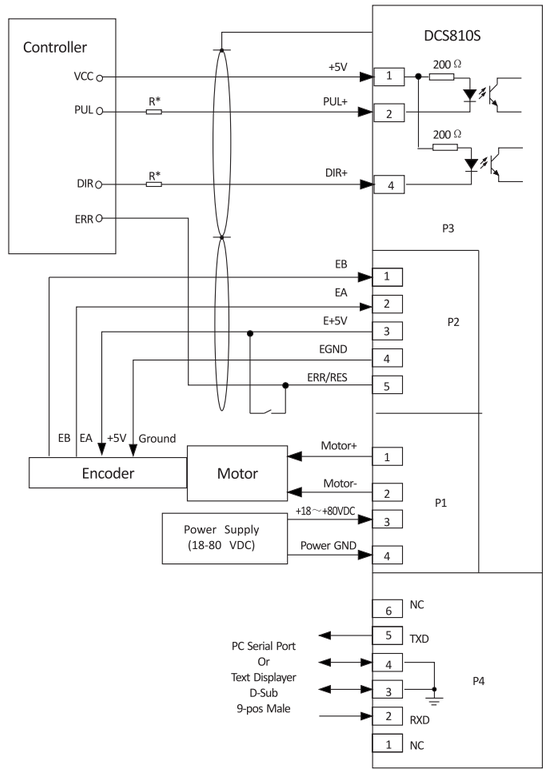

Notes:

* Series connect resistors R for current-limiting when +12V or +24V single-ended control signals are used. R=1K (Power>0.25W), if Vcc=12 V, and R=2K (Power>0.25W), if Vcc=24 V.

DCS810

1) Using differential controller

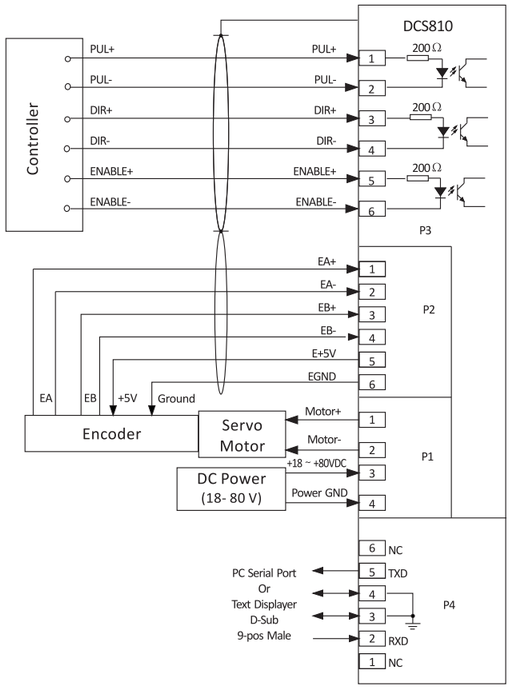

2) Using single-ended controller

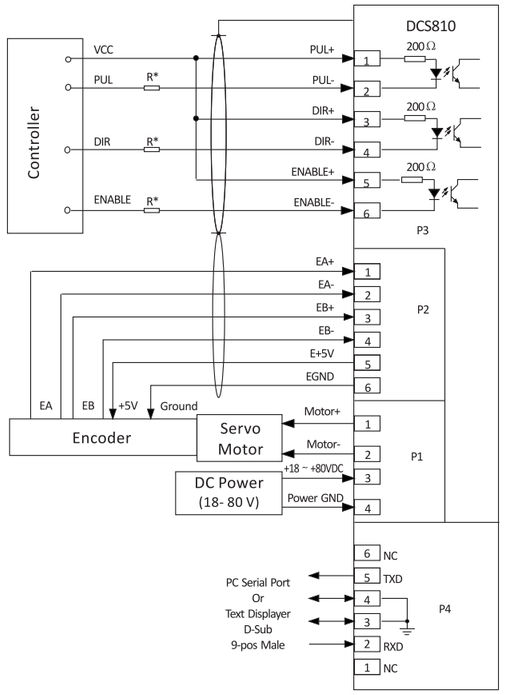

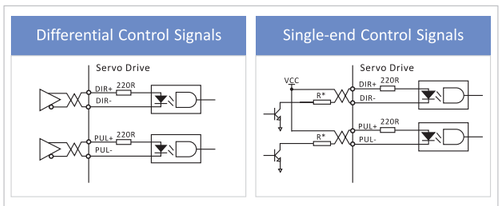

Notes:

1. The drive can accept differential and single-ended inputs, including open-collector and PNP output. Recommend use differential (line driver) control signals to increase noise immunity of the system.

2. *Series connect resistors for current-limiting when +12V or +24V single-ended control signals are used. R=1K (Power>0.25W), if Vcc=12 V, and R=2K (Power>0.25W), if Vcc=24 V.

10.7 Mechanical Specifications

Units: mm 1 inch = 25.4 mm

DCS303

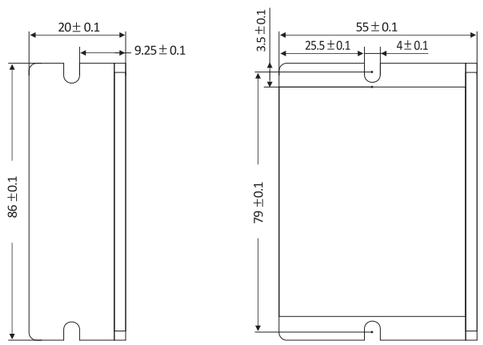

DCS810, DCS810S

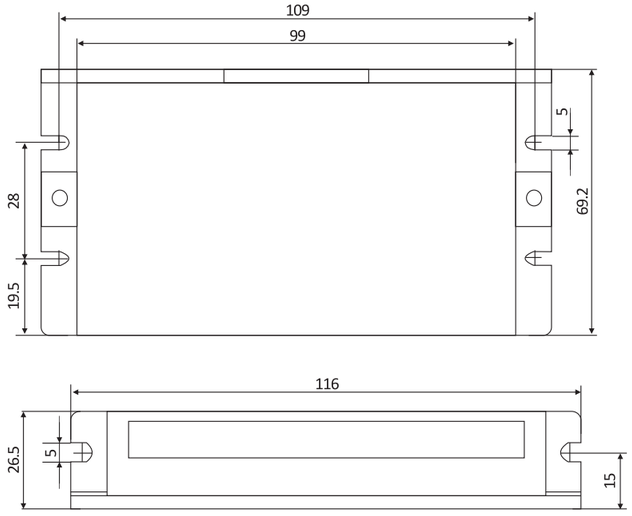

11 DCM Series
DC Servo Motors

The DCM series motors are permanent magnet brushed DC servo motors. The motors are high quality and cost-effective, making them ideal for cost sensitive applications. All of them come with an attached encoder which provides position feedback to controllers.

The DCM series brushed DC servo motors are widely used in inkjet printers, medical equipment, measuring devices, engraving machines, electronic packing equipment, and so on. Particularly suited to the applications requiring minimal vibration, super-low noise, high precision and high speed.

Frame Size	Ø 54mm Max			
Rated Power	50W	80W	120W	

11.1 Part Number

DCM ① **50205** ② **D** ③ — **1000** ④

①	**Series**	DCM: DCM Series DC servo motors		
②	**Power**	50202A: 50W	50205: 80W	50207: 120W
③	**Encoder Type**	D: Differential	Blank: Single-ended	
④	**Encoder Resolution**	1000: 1000-line(4000ppr)	2500: 2500-line(10000ppr)	

11.2 Electrical Specifications

Ø 54mm Max
Power: 50W, 80W, 120W



Specifications

Parameters	Units	DCM50202A	DCM50205	DCM50207
Rated Voltage	VDC	24	24	30.3
Rated Power	W	50	80	120
Continuous Torque (Max)	Nm	0.15	0.25	0.35
Peak Torque (Stall)	Nm	0.76	1.59	2.90
No-load Speed	RPM	4600 ± 10%	4000 ± 10%	3600 ± 10%
Rated Speed	RPM	3500	3400	2900
Rated Current	A	1.79	2.95	3.94
Peak Current (Stall)	A	13.9	21.6	32.6
No-load Current	A	0.45	0.5	0.45
Torque Constant	Nm/A	48 x 10^{-3}	52 x 10^{-3}	80 x 10^{-3}
Rotor Inertia	Kg*m^2×10^{-5}	1.62	3.11	4.73
Winding Temperature	°C	155 (Max)	155 (Max)	155 (Max)
Thermal Impedance	°C/watt	9.00	7.30	4.98
Encoder Resolution	Line	500/1000 optional	500/1000 optional	500/1000 optional
Length (Plus Encoder)	mm	133 ± 2	165 ± 2	196 ± 2
Weight (Plus Encoder)	g	694	1182	1338

Encoder Specifications & Connections

The rated voltage of the encoders come with the DCM series motors is 5VDC, and it consumes 50mA(max). The DCM5xxxxx-1000 motor comes with a 1000-line encoder, and the DCM5xxxxx-500 motor comes with a 50-line encoder. The Z (Index) signal is NOT offered by standard models, please contact Leadshine if an encoder with Z (Index) signal is required.

Encoder Connections

Connections of a single-ended encoder			Connections of a differential encoder		
Pin	Wire Color	Connection (DCS303, DCS810S / DCS810)	Pin	Wire Color	Connection (DCS810)
1	Blue	Channel B (EB / EB+)	1	Black	Channel A+ (EA+)
2	Yellow	Channel A (EA / EA+)	2	Blue	Channel A- (EA-)
3	Red	VCC (E+5V / E+5V)	3	Yellow	Channel B+ (EB+)
4	Black	Ground (EGND / EGND)	4	Green	Channel B- (EB-)
5	Green	Index / NC (NC / NC)	5	Red	VCC (E+5V)
			6	White	Ground (EGND)

11.3 Mechanical Specifications

Units: mm 1 inch = 25.4 mm

● DCM50202A

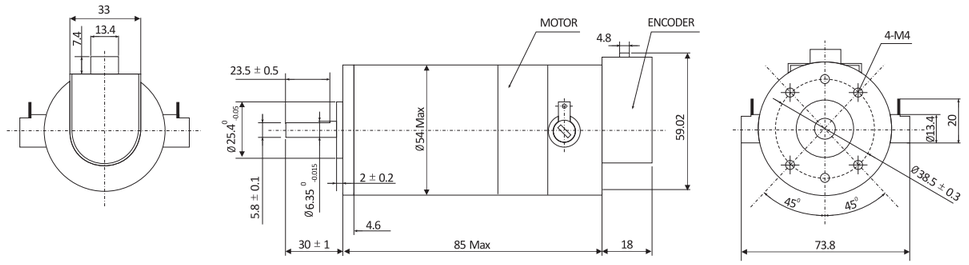

● DCM50205

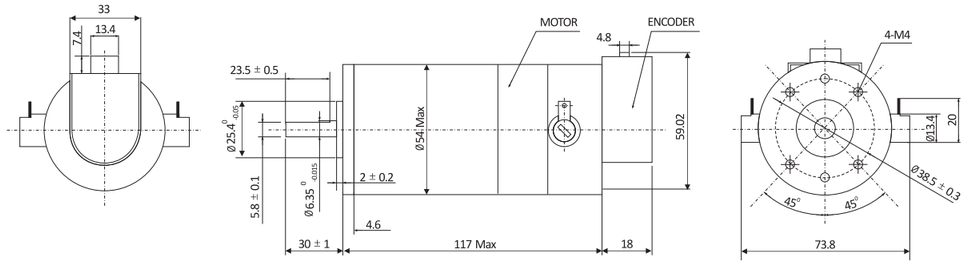

● DCM50207

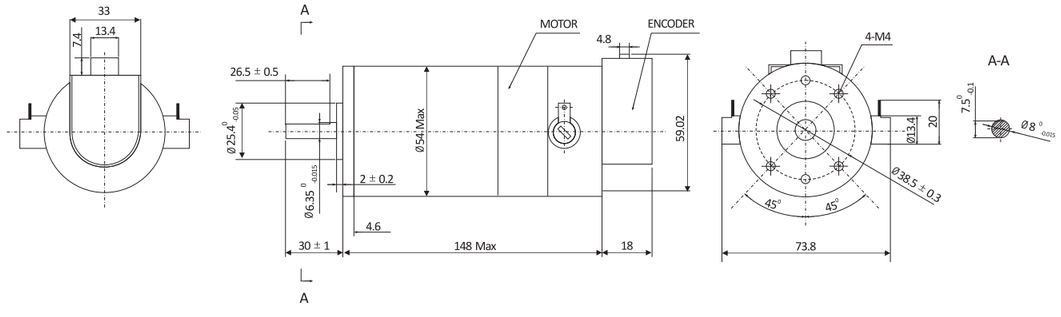

Installation Notes:

(1) Do not give strong impact shock to the motor shaft.

(2) Make sure the encoder signals are connected to the drive correctly.

(3) The motors are not water proof. Please contact Leadshine if you need a water proof product.

(4) Keep the ambient temperature within the permissible temperature range (0 to 40 °C) for the product. Use force cooling methord if necessary.

11.4 Speed-Torque Curves

Matching Drives

DCS303	DCS810 / DCS810S
90 W	400 W

● DCM50202A

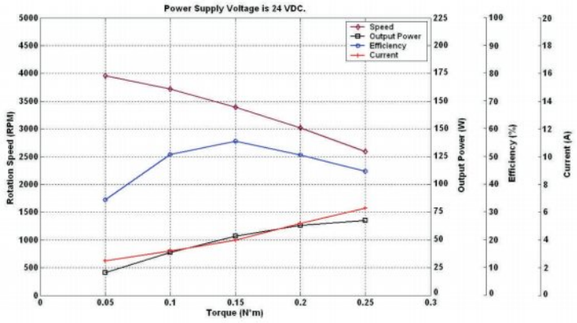

● DCM50205

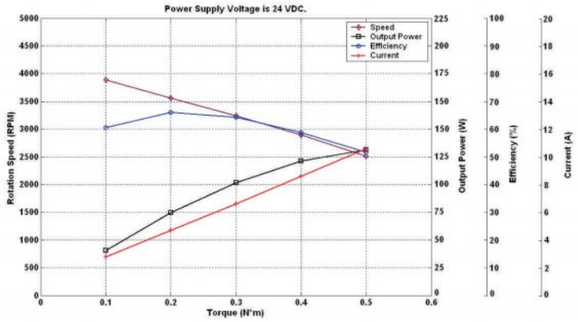

● DCM50207

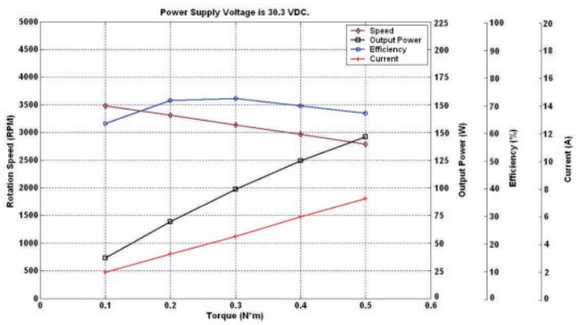

12 DC Servos Order Information

Power	Drive	Motor	Accessories
50 W	 DCS303	 DCM50202A-1000	CABLE-PC-1 (RS232 cable for using ProTuner. 1.5m standard.) Note: The DCM50202A-1000 is a DC servo motor with a 1000-line incremental encoder (A, B phase single-ended) , and the DCM50202A-500, a DC servo motor with a 500-line incremental encoder (A, B phase single-ended) is optional.
50 W	 DCS810	 DCM50202AD-1000	CABLE-PC-1 (RS232 cable for using ProTuner. 1.5m standard.) Note: The DCM50202AD-1000 is a DC servo motor with a 1000-line incremental encoder (A, B phase differential) , and the DCM50202AD-500, a DC servo motor with a 500-line incremental encoder (A, B phase differential) is optional.
80 W	 DCS810S	 DCM50205-1000	CABLE-PC (RS232 cable for using ProTuner. 1.5m standard.) Note: The DCM50205-1000 is a DC servo motor with a 1000-line incremental encoder (A, B phase single-ended) , and the DCM50205-500, a DC servo motor with a 500-line incremental encoder (A, B phase single-ended) is optional.
80 W	 DCS810	 DCM50205D-1000	CABLE-PC (RS232 cable for using ProTuner. 1.5m standard.) Note: The DCM50205D-1000 is a DC servo motor with a 1000-line incremental encoder (A, B phase differential) , and the DCM50205D-500, a DC servo motor with a 500-line incremental encoder (A, B phase differential) is optional.
120 W	 DCS810S	 DCM50207-1000	CABLE-PC (RS232 cable for using ProTuner. 1.5m standard.) Note: The DCM50207-1000 is a DC servo motor with a 1000-line incremental encoder (A, B phase single-ended) , and the DCM50207-500, a DC servo motor with a 500-line incremental encoder (A, B phase single-ended) is optional.
120 W	 DCS810	 DCM50207D-1000	CABLE-PC (RS232 cable for using ProTuner. 1.5m standard.) Note: The DCM50207D-1000 is a DC servo motor with a 1000-line incremental encoder (A, B phase differential) , and the DCM50207D-500, a DC servo motor with a 500-line incremental encoder (A, B phase differential) is optional.

Note: The STU-DCS and the cable between the STU-DCS and drive are NOT standard accessories. Please specify when you place an order if you need.